JAMES A. GRAASKAMP COLLECTION OF TEACHING MATERIALS

VII. INDUSTRY EDUCATIONAL COURSES - LONG TERM

E. Chemical Bank

2. "Real Estate Feasibility Seminar", Chemical Bank Real Estate Lending Seminar: Includes handouts for participants with computer runs dated March 11-12, 1979

SOURCE OF DATA

FOR

CHEMICAL BANK SEMINAR

All data used in this demonstration case was taken from James A. Graaskamp's hypothetical case studies and are intended for educational purposes only.

CHEMICAL

BANK

SEMINAR

CHEMICAL BANK REAL ESTATE LENDING SEMINAR

Wednesday

1:00-2:30 The Real Estate Process and Risk Management Systems

2:30-3:15 Formatting Traditional and Contemporary Financial Approaches to Income

1. Revenue required by stated capital investment
2. Revenue justified capital investment
3. Relationship of before tax and after tax approaches

3:30-5:00 Financial Ratio Approaches

1. First level risk ratios - demonstrations
2. Second level incentive ratios - demonstrations
3. Third level regulatory ratios - demonstrations

Hand out Shopping Center Case for evening reading

Thursday

9:00-10:30 Systematic Analysis of a Project

10:45-12:00 Initial Financial Analysis With Basic Ratio Approach Applied to Shopping Center

1:00-2:00 Residential Lending - Shift of Risk to Institutional Specialists
Income Property Lending - A Commodity Market Risk System

2:00-3:00 Projections Over Time - Shopping Center Case Demos

1. The Ellwood concept applied - before tax (computer service output)
2. Mortgage equity approach applied - after tax (computer service output)

3:15-5:00 Sensitivity Analysis for Shopping Center Case Study (Using computer outputs on EDUCARE DAP)

Friday

9:00-9:30 A Systematic Approach to Income Property Mortgage Loan Analysis

9:30-10:30 Analysis of Shopping Center Design Proposals

10:30-12:00 Shopping Center Financial Analysis Ala MR CAP

1. Financial contributions of each lease
2. Reorganization of proposal
3. Conditions of mortgage loan

1:00-2:30 Alternative Shopping Center Financing Solutions

1. Partnership solution
2. Land-leaseback solution

2:30-3:15 How to Critique an Appraisal Report or Feasibility Study

3:30-4:15 The Ethics of Real Estate Finance

REAL ESTATE FEASIBILITY SEMINAR

Presented by Professor James A. Graaskamp, SREA, CRE
University of Wisconsin School of Business

I. Basic Concepts and Definitions

A. Real estate is a tangible product - defined as artificially delineated space with a fourth dimension of time referenced to a fixed point on the face of the earth.

1. Real estate is a space-time unit, room per night, apartment per month, square foot per year, tennis court hours, or a condominium for two weeks in January at a ski slope.
2. To the space-time abstraction can be added special attributes to house some form of activity.
3. Improvements from survey market to city layouts to structures define space.
4. Legal contracts and precedents define time.
5. Rights of use are defined by public values, court opinions.
6. Private rights to use are those which remain after the public has exercised its rights to control, to tax, or to condemn.

B. A real estate project is cash cycle business enterprise which combines a space-time product with certain types of management services to meet the needs of a specific user. It is the process of converting space-time needs to money-time dimensions in a cash economy.

1. A real estate business is any business which provides expertise necessary to relate space-time need to money-time requirements and inclues architects, brokers, city planners, mortgage bankers, and all other special skills.
2. The true profit centers in real estate are in the delivery of services and cash capital. Money is an energy transfer system.
3. Equity ownership is the degree to which one enterprise controls or diverts cash from another real estate enterprise.
4. Public has direct ownership to the degree real estate taxes take a percentage of tenant income in excess of service cost.
5. Consumer must view space as a total consumption system involving direct cost, surface cost, transportation cost and negative income of risk.
6. The best real estate project is the one which has the lowest net present value of cost as the sum of cost to the consumer production sector and public sector.

C. The real estate process is the dynamic interaction of three groups, space users (consumers), space producers, and the various public agencies (infrastructures) which provide services and capital to support the consumer needs. (See Exhibit 1)

1. Each of these three decision groups represent an enterprise, an organized undertaking. All are cash cycle enterprises constrained by a need for cash solvency, both short and long term.
2. A desirable real estate solution occurs when the process permits maximum satisfaction to the consumer at a price that he can afford within the environmental limits of land while permitting the consumer, producer, and the government cash cycle to achieve solvency - cash break even at a minimum, after full payment for services rendered.
3. Solvency of the total process, not value, is the critical issue.
4. Land is an environmental constraint and not a profit center.
5. Land provides access to a real estate business opportunity and is not the opportunity itself. Real estate business wants to control land to create a captive market for services.

D. Land is the point where demand and supply forces find cash solvency. Location is a manufactured attribute. Site attributes are exploited to reduce outlays and to increase receipts and include:

1. Physical attributes
2. Legal-political attributes
3. Linkage attributes
4. Dynamic attributes
5. Environmental attributes

E. Recognition of the fact that profit maximization must be limited by concerns for physical environment and community priorities for land use has resulted in redefinition of the most basic concept in appraisal; i.e. highest and best use, in the authorized terminology handbook sponsored by the American Institute of Real Estate Appraisers and the Society of Real Estate Appraisers. Compare the 1971 definition with that for 1975:

> Highest and best use concept-
> "A valuation concept that can be applied to either the land or improvements. It normally is used to mean that use of a parcel of land (without regard to any improvements upon it) that will maximize the owner's wealth by being the most profitable use of the land. The concept of highest and best use can also be applied to a property which has some improvements upon it that have a remaining economic life. In this context, highest and best use can refer to that use of the existing improvements which is most profitable to the owner. It is possible to have two different highest and best uses for the same property: one for the land ignoring the improvements; and another that recognizes the presence of the improvements.:
> p. 57, Real Estate Appraisal Principles and Terminology, Second Edition, Society of Real Estate Appraisers 1971.

Exhibit 1

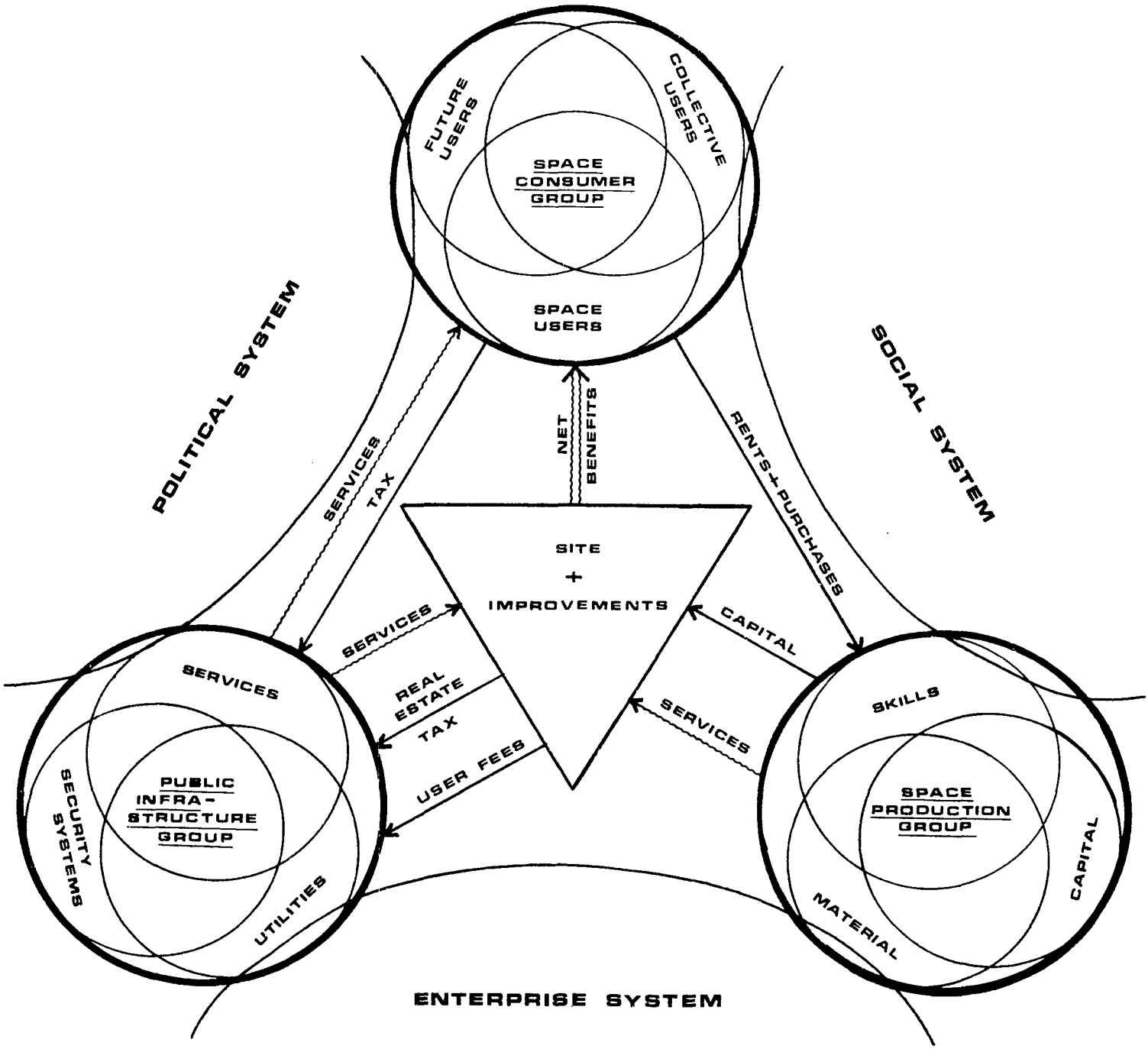

THE REAL ESTATE PROCESS

"Highest and Best Use: That reasonable and probable use that will support the highest present value, as defined, as of the effective date of the appraisal. Alternatively, that use, from among reasonably probable and legal alternative uses, found to be physically possible, appropriately supported, financially feasible, and which results in highest land value. The definition immediately above applies specifically to the highest and best use of land. It is to be recognized that in cases where a site has existing improvements on it, the highest and best use may very well be determined to be different from the existing use. The existing use will continue, however, unless and until land value in its highest and best use exceeds the total value of the property in its existing use. Implied within these definitions is recognition of the contribution of that specific use to community environment or to community development goals in addition to wealth maximization of individual property owners. Also implied is that the determination of highest and best use results from the appraisers judgement and analytical skill, i.e., that the determined from analysis represents an opinion, not a fact to be found. In appraisal practice, the concept of highest and best use represents the premise upon which value is based. In the context of most probable selling price (market value) another appropriate term to reflect highest and best use would be most probable use. In the context of investment value an alternative term would be most profitable use."
Real Estate Appraisal Terminology, Edited by Byrl H. Boyce, Ph.D. SRPA, Ballinger Publishing Co., Cambridge, Mass. 1975

F. The purchase of a piece of real estate today involves the acceptance of a great many assumptions about the future. Those who take care to validate these assumptions in a period of transition as to public land use control tend to have the most successful investment.

1. Business decisions today make explicit recognition of their assumptions and the need to act under conditions of uncertainty.
2. Business risk is the difference between assumptions about the future and realizations, the proforma budget and the end of the year income statement.
3. Risk management is the control of variance between key assumptions and realizations.
4. An appraisal is a set of assumptions about the future productivity of a property under conditions of uncertainty.

G. The concept of highest and best use of land was a commodity concept which did not consider externalities adequately. It is being replacec be concepts of most fitting use and the concept of most probable use.

1. The most fitting use is that use which is the optimal reconciliation of effective consumer demand, the cost of production, and the fiscal and environmental impact on third parties.
2. Reconciliation involves financial impact analysis on "who pays" and "who benefits" - thus the rash of debate on how to do impact studies.

3. The most probable use will be something less than the most fitting use depending on topical constraints imposed by current political factors, the state of real estate technology, and short term solvency pressures on consumer, producer, or public agency.
4. Most probable use means that an appraisal is first a feasibility study of alternative uses for a site in search of a user, an investor, and in need of public consent.

H. In seeking the most fitting and most probable use, the inner city planner and private property appraiser must interact to determine how community objectives and consumer - production sector solvency can be achieved simultaneously.

1. A real estate decision has only two basic forms. Either a site is in search of a use and consumer with the ability to pay, or a consumer, need or use with a defined ability to pay is seeking some combination of space-time attributes he can afford.
2. The individual consumer with needs and a budget is the drive wheel.
3. The public sector represents the community owned consumer service delivery system, seeking to minimize marginal cost to the consumer and average cost to the community at large.
4. The production sector responds to a derivative demand for engineering and management expertise.

I. Critiquing the form and adequacy of a real estate solution is analogous to the artistic concept of judging the success of an art object by relating form of the solution to the context to which it was created.

1. Context includes those elements which are fixed, given, or objectives and to which any solution must adapt.
2. Form giving elements are those variables within the artists control, i.e. options or alternatives at a particular time.
3. A solution is judged for its correctness or success in terms of the degree of fit of the form proposed to the context.
4. Feasibility analysis is concerned with the degree of fit or the extent of misfit between a proposed course of action and the context within which it must operate or fit.
5. Success therefore depends on how appropriately the problem is defined; testing feasibility depends primarily upon accurate and comprehensive definition of the context.

J. An enterprise is any organized undertaking, and a real estate problem or project always begins from the viewpoint of some enterprise relative to its environment.

1. The systems engineer sees the eventual form of an enterprise, in terms of both its configuration and behavior, as representing a negotiated consensus between two general sources of power--the power of the environment to dictate form and behavior of the organization on one hand and the power of the organization to decide for itself what its characteristics and behavior will be on the other.

2. The system engineer uses "power of the environment" as a dynamic alternative to the static implications of context and adds dynamic element of behavior to the elective responses of the form giver.

II. Financial Management and Risk Management

Investment is a real estate enterprise as mortgage lender or equity investor is simply buying a set of financial assumptions about the interaction of the project to its context, of the firm to its environment. Real estate analysis is to control the variance between expectations and realizations, between proforma prospects and historical balance sheets and profit and loss statements.

A. Analysis is risk management, control of variance.
B. There are essentially two types of risk exposures:

   1. Static risks (uncontrollable, or external events) are those which can only cause a loss due to surprise upset of a plan.

   2. Dynamic risks (partially controllable internal events) can produce profit or loss and are best controlled by the finesse of management execution of a plan.

C. Risk evaluation or comparison grows out of the function of risk management for an enterprise.

   1. Risk management has two objectives:

      a. First priority - conservation of existing enterprise assets despite surprise events.
      b. Second priority - realization of budgeted expectations despite surprise events.

   2. The process of risk management involves systematic and continuous:

      a. Identification of significant exposures to loss
      b. Estimation of potential loss frequency and severity
      c. Identification of alternative methods to avoid loss
      d. Selection of a risk management method
      e. Monitoring execution of risk management plan

   3. The risk management process is both a philosophy of inquiry or analysis and a checklist of management concern, which is attempting to answer systematically "WHAT IF...?" questions, to anticipate surprise and to provide for a response or adjustment in advance of the contingency.

D. Identification of significant exposures to loss can begin by using standard business documents as reminders, such as:

   1. Review of balance sheet accounts
   2. Review of profit and loss statement accounts
   3. Review of business organization or function chart
   4. Review of elements of financial feasibility analysis

E. Significant has to do with potential loss frequency, loss severity, and degree of uncertainty.

   1. Very frequent and minor become expense accounts
   2. Less frequent but predicatable and major become reserves or budget allowances.

3. Infrequent, uncertain but very severe become issues of risk management.
4. A 50/50 probability is the most uncertain outcome.

F. The alternative methods of avoiding loss which everyone subconsciously uses include:

1. Eliminate risk exposure
2. Reduce frequency or severity of loss (diversification or mortgage loan closing process)
3. Combine risks to increase predictability (reserves for expense)
4. Shift risk by contract (subcontracts or escalator clauses)
5. Shift risk by combination (diversification) by contract (insurance)
6. Limit maximum loss (corporate shell or limited partnership)
7. Hedging (sale and leaseback, options, contingent sales)

G. Risk management concepts leads to understanding of the true essence of a mortgage contract and an equity commitment

1. A mortgage is a classic straddle in two markets for the borrower; it is a call on a space-time commodity in a rising market and a put to the lender in a falling market. It is also a straddle in the money market. The mortgage contract is a risk management agreement to provide coverage of static risks and an imperfect straddle on the dynamic risks. Protection for the lender is revenue to the borrower, negative incentives, and salvage.

2. Equity ownership is the degree to which you can divert cash flow and maintain control within an acceptable level of risk avoidance.

III. Feasibility Analysis

A. The concept of feasibility is elusive and much abused. Combining the systems concept of enterprise under conditions of uncertainty and the physical design concept of fit leads to the following definition:

> "A real estate project is 'feasible' when the real estate analyst determines that there is a reasonable likelihood of satisfying explicit objectives when a selected course of action is tested for fit to a context of specific constraints and limited resources.

B. The problem of defining objectives and measuring success depends almost entirely on correctly defining the problem and values of the client.

The majority of enterprises are not solely interested in rate of return on investment or lowest cost.

Most decisions must fit a combination of success "measures" with each decision maker weighting the overall importance of each item differently. Examples of such measures would be:

1. A check list of physical attributes
2. A check list of critical linkage attributes
3. A check list of dynamic behavioral attributes

4. A check list of attributes or services (given weighted point scores)
5. Financial ratios measuring risk, such as cash break-even, rate of capital recapture, loan ratios or sensitivity to specified contingencies
6. Probability distributions of alternative outcomes and standard error of the estimate
7. Pshychological gratifications
8. Specified legal attributes
9. Measures of impact on environment

C. The definition also implies uncertainty - a reasonable likelihood of succeeding. That statement is deliberately short of a statistical probability statement. However, analystical judgments can produce some verbal probability statements (that horse is a nag while the black stallion is an odds on favorite) so that the measures of success should lend themselves to explicit recognition of the degree of uncertainty with which success might be achieved.

D. The general theory of the management process for any enterprise can be converted to real estate semantics for feasibility:

Values, objectives, policy	Strategic format
Search for opportunity alternatives	Market trend analysis
Selection of an opportunity	Merchandising target with monopoly character
Program to capture opportunity	Legal-political constraints Ethical-aesthetic constraints Physical-technical constraints Financial constraints
Construction of program	Project development
Operation of program	Property management
Monitoring and feedback	Real estate research

E. The analyst must also identify and measure or define the limited resources of the client in terms of personnel, expertise, available cash resources, and the time line of expectations and commitment since time available to achieve the solution is often a critical resource and constraint relative to alternative choices.

F. These basic elements and definitions then lead to a correct title for the report required. Most feasibility reports go wrong on the title page because the analyst did not clearly understand to which elements of context and form his report was to be addressed. Seldom does the analyst do a complete feasibility study as a single report on his own. Components may be provided by others and the sequence of sets may differ in each case depending on how the consultant understands the client. Therefore, a report should be entitled as one of the following:

1. Strategy study: selection of objectives, tactics, and decision criteria.
2. Market analysis: economic base studies or other related aggregate data review.
3. Merchandising studies: consumer surveys, competitive property analysis, marketability evaluation, etc.
4. Legal studies: opinion on potential legal constraints, model contracts or forms of organization, and political briefs.

5. Compatability studies of project to community planning, conservation standards, or other public policies.
6. Engineering, land planning, and architectural studies.
7. Financial studies: economic modeling, capital budgets, present value and discounted cash flow forecasts, rate of return analysis, financial packages.

G. Correctly defining the context in all its basic dimensions requires a generalist; an appraiser is a generalist. A feasibility study produces a set of paramters, a set of predesigned or preoperational specifications within which a program proposal should work. The analyst and his client should always remember that the second stage of the feasibility study will be confirmation of the feasibility assumptions and parameters by technical analysis and planning by the specialists.

H. An appraisal is a forecast of productivity of a property relative to the needs of a certain buyer group and a prediction of the price at which it would sell to the most probable buyer.

1. Anticipation of an economic behavior by the buyer leads to the highest price he would be willing to pay.

2. Anticiaption of the behavior of the seller leads to an estimate of the least he would be willing to accept.

3. Analysis of the influence of outside factors affecting price supply and demand leads to an estimate control tendency between buyer and seller maximum.

4. The upper and lower ranges specify a transaction zone within which a most probable price will occur. The most probable sales price does not need to be at the center of the zone nor do the alternatives need to follow a normal distribution curve. The zone and the distribution most typically are statements of verbal probability.

I. An appraisal is therefore a feasibility study of alternative courses of action and these alternatives are matched to the most probable user/investment group to be seeking such a property opportunity at that time.

The appraisal process as a feasibility study lends itself to the following logical process:

1. What is the problem for which the appraisal is to serve as a benchmark?

2. Which definition of value would best serve the decision process?

3. What does an inventory of site attributes reveal as to the positive and negative contributions of the site to alternative uses?

4. What does an inventory of improvement attributes existing on the site reveal as to the positive and negative contributions of the improvements to alternative uses?

5. What basic alternative use programs or scenarios may be considered as plausible alternatives motivating buyers as of the date of the appraisal?

6. Which alternative use appears to be the most probable use when screened by external factors including effective market demand, political controls, forecasting risk, and potential profitability as perceived by investor/buyers.

7. What is the profile of the most probable buyer/investor for the most probable use to the degree that the profile can define the search for comparable transactions?

8. Could the appraiser simulate the purchase guidelines of a most probable buyer group if there were no sales which were thought to be comparable and appropriate to the subject situation?

9. What is the value to be justified by the appraiser using normative, traditional measures of what a buyer should do, such as the cost approach or conventional income approach?

IV. Introduction to Financial Analysis

Review of property attributes and identification of alternative uses which have potential for effective demand typically narrows the alternative for further consideration to those where potential revenue can support reasonable capital budget parameters. Initial financial analysis does not involve present value theory but rather progressive refinement of ratios and risk characterisitcs for consumers, producers, and the public infrastructure. Analysis which follows is concerned with only the private production and finance side of the equation.

A. There are two points of departure for analysis:

1. Given the capital budget, it is necessary to convert to the required rents necessary to support the project and cash return objectives. Specified budgets converted to required rents is often called the front door approach.
2. Given market rent per unit, it is necessary to establish the maximum justified capital budget. Targeted market rents converted to justified investment can be allocated to various development budgets and is called the back door approach.

B. Refer to the front door approach exhibit and example, oversimplified for purposes of illustration.

C. Refer to the back door approach exhibit and example

1. The back door approach is the preferred response to the market although lenders typically enter the scene after the capital budget is set.
2. Note that the back door approach can be driven by a default ratio or a debt cover ratio which are dynamic risk concepts rather than loan to value ratio which is a static regulatory concept.

C. The back door approach is the essence of the FHA 2013 form, state housing finance approach to projects where revenue is defined by the FMR rules, or even purchase of an existing property subject to long term rents, renovation, etc.

1. It is possible to detail the back door approach for any type of project by simply setting up tabs in a flow chart fashion as suggested by the example for a 236 project.
2. Another way to view the flow charts is in the nature of two basic programmable formulas:

$$\text{Gross rent} = \frac{TRC * ((LTV * MC) + (1 - LTV * CC))}{1 - (ER + RET + VR + RR)}$$

$$\text{Justified project budget} = \frac{GR}{\frac{(LTV * MC) + (1 - LTV * CC)}{1 - (ER + RET + VR + RR)}}$$

Where:
TRC = Total replacement cost; LTV = loan to value ratio
MC = mortgage constant; CC = Cash on cash for equity cash
ER = expense ratio; RET = real estate tax ratio
VR = Vacancy ratio; RR = reserve ratio

REVENUE REQUIRED BY CAPITAL BUDGET
LOAN TO COST RATIO APPROACH

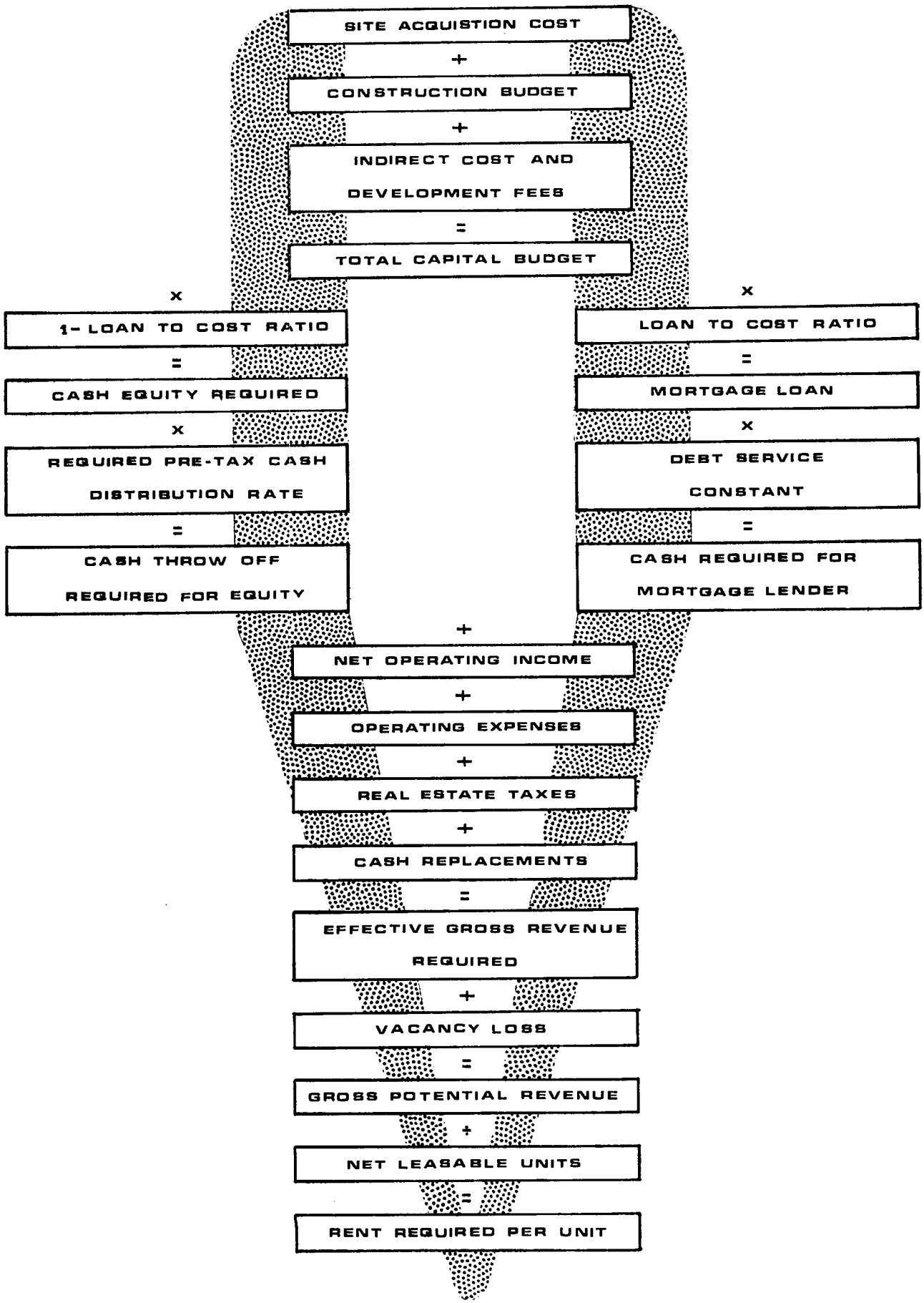

REVENUE JUSTIFIED CAPITAL BUDGET
DEBT COVER RATIO APPROACH

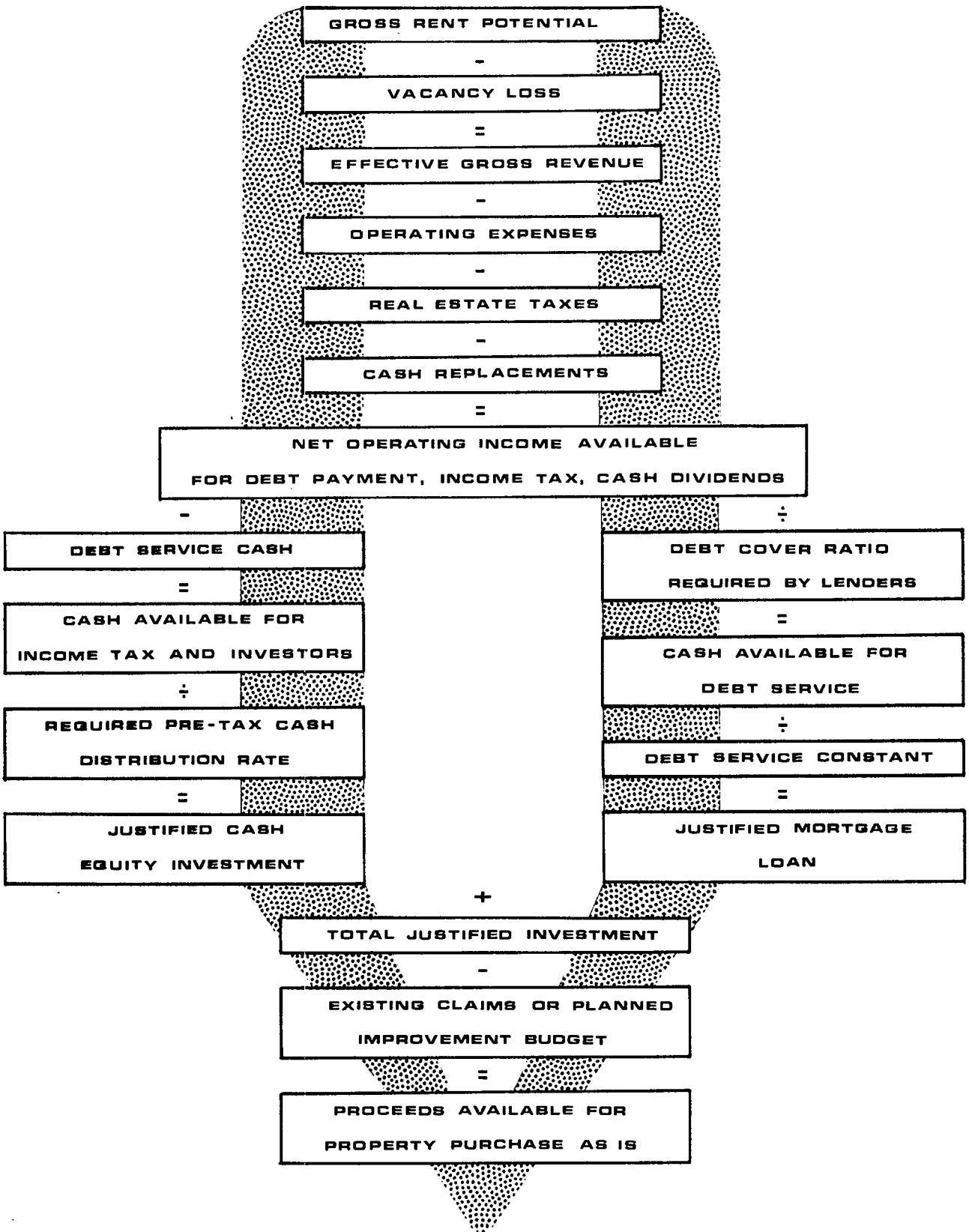

REVENUE JUSTIFIED CAPITAL BUDGET
DEFAULT RATIO APPROACH

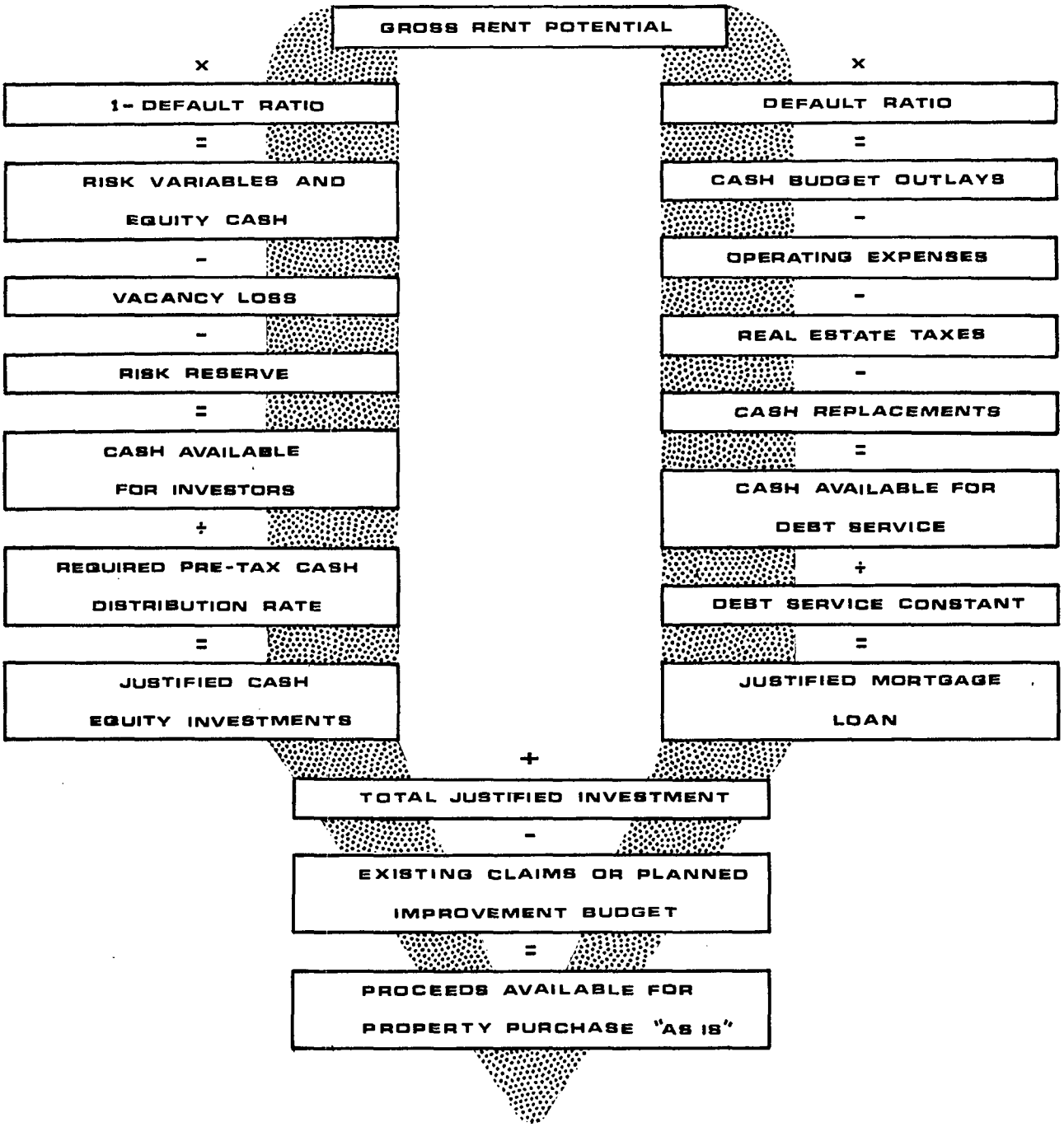

Demo Problem

I. Data

A. Site

1.	14,560 Sq. Ft.	=	Land Under Building
2.	48,438 " "	=	Parking Lot
3.	4,159 " "	=	Open Space
	67,157 " "	=	Total Site Area

B. Cost

1.	67,157 * 1.30	=	87,304	Land Cost
2.	14,560 * 20.415	=	297,236	Building Cost
3.	14,560 * 1.238	=	18,031	Intangibles
4.	48,438 * .50	=	24,219	Parking Lot
5.	48,438 * .0597	=	2,890	Parking Lighting
			429,680	Total Cost

C. Cost Summary

1.	87,304	= Land	=	.2032
2.	342,370	= Improvements	=	.7968
	429,680	= Total	=	1.000

D. Financial

1. Mortgage
   - a. .75 = Maximum Loan To Value Ratio
   - b. .09625 = Annual Interest Rate
   - c. 27 = Term
   - d. .1040699 = Constant
2. Equity

a.	.085	= Land Component	*	.2032	=	.017272
b.	.100	= Improvement Component	*	.7968	=	.079680
c.		Total		1.0000		.09695

E. Income Allocation

1.	2,688 S.F.	* 5.60/S.F.	=	Financial	=	13,404	=	.1807
2.	1,344 "	* 6.25 "	=	Liquor	=	8,400	=	.1130
3.	1,000 "	* 4.05 "	=	Cleaners	=	4,050	=	.0544
4.	1,000 "	* 5.00 "	=	Beauty Shop	=	5,000	=	.0672
5.	670 "	* 6.25 "	=	Barber	=	4,188	=	.0563
6.	7,858 "	* 5.00 "	=	Miscellaneous	=	39,290	=	.5283
				Total		74,368		1.0000

F. Vacancy Allocation

1.	13,404 * .03 =	403.20	Financial	=	.0788
2.	8,400 * .03 =	252.00	Liquor	=	.0493
3.	4,050 * .04 =	162	Cleaners	=	.0317
4.	5,000 * .04 =	200	Beauty Shop	=	.0391
5.	4,188 * .04 =	168	Barber	=	.0328
6.	39,290 * .10 =	3,929	Miscellaneous	=	.7683
	74,368	5,114			1.0000

G. Net Operating Income

1.	74,368	= Gross Income	=	1.0000
2.	-5,114	= Vacancy	=	-.0688
3.	-5,868	= Real Estate Taxes	=	-.0789
4.	-4,738	= Operating Expenses	=	-.0637
5.	- 730	= Cash Reserves	=	-.0098
	57,918	= Net Operating Income	=	.7788

II. Parameter Estimate - Cost Basis (Cost = Value)

A. Mortgage Estimate
1. 429,680 = Total Cost
2. * .75 = Maximum Loan To Value
3. 322,260 = Mortgage Amount

B. Estimated Annual Mortgage Payment
1. 322,260 = Mortgage Amount
2. *.1040699 = Annual Constant
3. 33,538 = Annual Debt Payment

C. Equity Estimate
1. 429,680 = Total Cost
2. -322,260 = Mortgage Amount
3. 107,420 = Equity Contribution

D. Return On Equity Estimate
1. 57,918 = Net Operating Income
2. - 33,538 = Debt Payment
3. 24,380 = Cash Throw-Off
4. ÷ 107,420 = Equity Contribution
5. .22696 = Return Rate On Equity

III. Parameter Estimate - Capitalized Basis (Improvement Residual)

A. Capitalized Return
1. .085 = Land
2. .100 = Improvements

B. Land Estimate
1. 87,304 = Land Cost
2. * .085 = Land Return
3. 7,421 = Return On Land

C. Improvement Estimate
1. 57,918 = Net Operating Income
2. - 7,421 = Return On Land
3. 50,497 = Return On Improvements
4. ÷ .10 = Rate On Improvements
5. 504,970 = Improvement Estimate

D. Project Estimate
1. 87,304 = Land Cost
2. 504,970 = Improvement Estimate
3. 592,274 = Project Estimate

E. Mortgage Estimate

1. 592,274 = Project Estimate
2. * .75 = Maximum Loan To Value
3. 444,206 = Mortgage Amount

F. Estimated Annual Mortgage Payment

1. 444,206 = Mortgage Amount
2. *.1040699 = Annual Constant
3. 46,228 = Annual Debt Payment

G. Equity Estimate

1. 592,274 = Project Estimate
2. -444,206 = Mortgage Amount
3. 148,068 = Equity Contribution

H. Return On Equity Estimate

1. 57,918 = Net Operating Income
2. - 46,228 = Debt Payment
3. 11,690 = Cash Throw-Off
4. ÷ 148,068 = Equity Contribution
5. .07895 = Return Rate On Equity Contribution

IV. Parameter Estimate - Band Of Investment

A. Mortgage Factor
1. .75 = Maximum Loan To Value Ratio
2. * .1040699 = Annual Mortgage Constant
3. .078052425 = Annual Mortgage Payment As A Function Of Project Estimate

B. Equity Factor
1. Land Component
a. .25 = Indicated Equity Contribution
b. * .2032 = Percent of Project Cost Attributed To Land
c. .05080 = Percent of Equity Return From Land
d. * .085 = Desired Return On Land
e. .004318 = Annual Equity Return On Land As A Function Of Project Estimate
2. Improvement Component
a. .25 = Indicated Equity Contribution
b. * .7968 = Percent Of Project Cost Attributed To Improvements
c. .1992 = Percent Equity From Improvements
d. * .10 = Desired Return On Improvements
e. .01992 = Annual Equity Return On Improvements As A Function of Project Estimate
3. Total Land And Improvements
a. .004318 = Land Component
b. .019920 = Improvement Component
c. .024238 = Annual Equity Payment As A Function Of Investment Estimate

C. Total Factor - Mortgage + Equity
1. .078052425 = Mortgage Factor
2. .024238000 = Equity Factor
3. .102290425 = Composit Capitalization Rate

D. Project Estimate
1. 57,918 = Net Operating Income
2. ÷.102290425 = Composit Capitalization Rate
3. 566,211 = Project Estimate

E. Mortgage Estimate
1. 566,211 = Project Estimate
2. * .75 = Maximum Loan To Value Ratio
3. 424,658 = Mortgage Amount

F. Mortgage Payment Estimate
1. 424,658 = Mortgage Amount
2. *.1040699 = Annual Constant
3. 44,194 = Payment Estimate

G. Check Of A-3 Above
   1. 44,194 = Annual Payment
   2. ÷566,211 = Project Estimate
   3. .0780524 = Approx. Same As A-3 Above

H. Equity Estimate
   1. 566,211 = Project Estimate
   2. * .25 = Indicated Equity Contribution Ratio
   3. 141,553 = Indicated Equity Contribution Amount

I. Equity Payment Estimate
   1. 57,918 = Net Operating Income
   2. -44,194 = Annual Debt Payment
   3. 13,724 = Cash Throw-Off

J. Check Of B-3-c
   1. 13,724 = Equity Payment (Cash Throw-Off)
   2. ÷566,211 = Project Estimate
   3. .024238 = Same As B-3-c

K. Check Of I-D-2-c
   1. 13,724 = Cash Throw-Off
   2. ÷141,553 = Equity Contribution
   3. .09695 = Cash-On-Cash Rate Check

V. Summary

Method	Project	Mortgage Amount	Equity Amount	Cash-On-Cash
Cost	429,680	322.260	107,420	.2269
Capitalized Net Operating Income	592,274	444,206	148,068	.07895
Band Of Investment	566,211	424,658	141,553	.09695

Demo Problem

Parameter Development - Itemized

I. Default Ratio = Cash Breakeven (DF)

$$DF = \frac{\text{Real Estate Taxes+Operating Expenses+Cash Reserves+Debt}}{\text{Gross Income}}$$

$$DF = \frac{5{,}868 + 4{,}738 + 730 + 33{,}538}{74{,}368}$$

$$DF = \frac{44{,}874}{74{,}368}$$

DF = .6034

II. Loan To Cost Ratio (L/C)

L/C = 322,260 = Mortgage Amount
429,680 = Project Cost

L/C = .7500

III. Debt Coverage Ratio (DC)

DC = 57,918 = Net Income
33,538 = Annual Debt Payment

DC = 1.7269

Analysis of Default Ratio

Utilizing Band Of Investment Project Estimates

I. Default Ratio

$$DF = \frac{5,868 + 4,738 + 730 + 44,194}{74,368}$$

$$DF = \frac{55,530}{74,368}$$

$$DF = .7467$$

II. Effective Cash Cushion

A.
```
 1.0000 = Potential Gross Income
-.7467  = Default Ratio
 .2533  = Potential Cash Surplus
-.0688  = Vacancy
 .1845  = Effective Cushion
```

B.
```
74,368  = Potential Gross Income
*.1845  = Cushion
13,721  = Effective Cash Cushion
```

III. Variation Estimate

A.	74,368	= Potential Gross Income	- .1845
B.	-5,114	= Vacancy	+ 2.6831
C.	-5,868	= Real Estate Taxes	+ 2.3383
D.	-4,738	= Operating Expenses	+ 2.8960

What Is A Good Default Ratio?

The default ratio as a risk index can and does vary for a variety of reasons; as does the preception of risk associated with a project. As the preception of risk increases the default ratio should decrease. It is inconsistent to refer to a project as being "risky" and then allow a default ratio of 90%.

Ideally the analyst would prefer to derive a default ratio depending on the relationships of Use, Lease Type, Lease Term and Space Rented. For example the Demo Problem indicates that the subject property includes a Financial Use, Liquor Store and a Barber Shop. On a scale of 1 to 5, 1 being good and 5 being bad, an analyst could evaluate each use relative to its market potential and develop the following table:

Financial = 1
Liquor = 3
Barber = 4

But further analysis might indicate the following lease structures:

Financial = Net Net Net Lease, Market Rent, 5 year term
Liquor = Net Net Lease, Market Rent, 5 year term
Barber = Gross Lease, Market Rent, 1 year term

With this additional information the risk estimates might result in the following:

Financial = 1
Liquor = 3
Barber = 4

Finally a comparison between space allocation and regional averages may show the following:

Use	Allocated	Average	Difference	% Difference
Financial	2,688	2,594	94	.0350
Liquor	1,344	2,400	-1,056	-.7857
Barber	670	620	50	.075

With this information and no supportive data to the contrary, the risk estimates might result in the following:

Financial = 1
Liquor = 4
Barber = 4

Note that this entire analysis is centered around the Property component of the analysis process. The People and the Financing will be dealt with later. The emphasis here is the relationship between the Space User and its possibility of default. Without the Space User any project will eventually default regardless of how strong the investor or how sweet the financing.

Default Ratio Index - Suggested Only

	Low	Avg.	High
I. By Use			
A. Good Strong - Major National Chain	.85	.90	.93
B. Local User - Established Trade	.75	.80	.85
C. New Local User - New Location	.65	.70	.75
D. Miscellaneous - Undefined	.45	.50	.65
II. By Lease Type			
A. Gross Lease Lessor Pays Property Tax Insurance Maintenance	.65	.70	.75
B. Net Lease Lessor Pays Insurance Maintenance	.75	.80	.85
C. Net Net Lease Lessor Pays Maintenance	.80	.85	.90
D. Net Net Net Lease Lessor Pays	.85	.90	.93

Default Ratio Weighted - By Use Category

I. Local Use Established Trade

Financial	2,688	=	.1846	*	.87	=	.1606
Liquor	1,344	=	.0923	*	.80	=	.0738
Cleaners	1,000	=	.0687	*	.80	=	.0550
Beauty Shop	1,000	=	.0687	*	.80	=	.0550
Barber Shop	670	=	.0460	*	.80	=	.0368
	6,702		.4603				.3812

Alternative To Above

6,702 = Total Category 2
÷ 14,560 = Total Building Area
.4603 = % Category 2
* .80 = Average Category 2
.3682 = Weighted Default Ratio - Category 2 Use

II. Miscellaneous Use

7,858 = Total Category 4
÷ 14,560 = Total Building Rentable Area
.5397 = % in Category 4
* .50 = Average for Category 4
.2699 = Weighted Default Ratio - Category 4 Use

III. Building Default Ratio

.3812 = Weight Category 2
.2699 = Weight Category 4
.6511 = Total Building

Alternative Method

.3682 = Weight Category 2
.2699 = Weight Category 4
.6381 = Total Building

REVENUE JUSTIFIED CAPITAL BUDGET
DEFAULT RATIO APPROACH

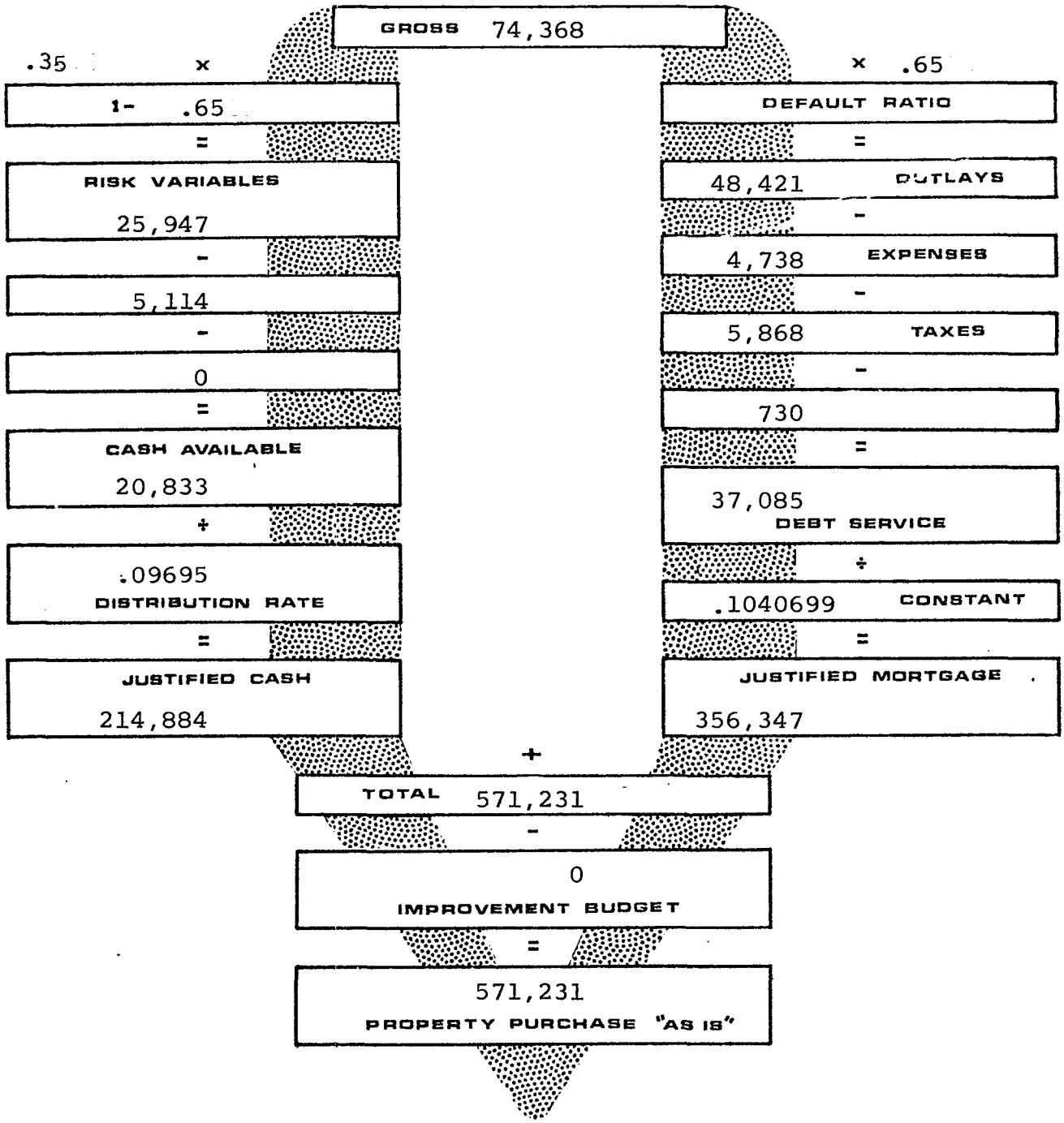

Loan To Value = .6238

Debt Coverage Ratio = 1.5618

REVENUE JUSTIFIED CAPITAL BUDGET
DEFAULT RATIO APPROACH

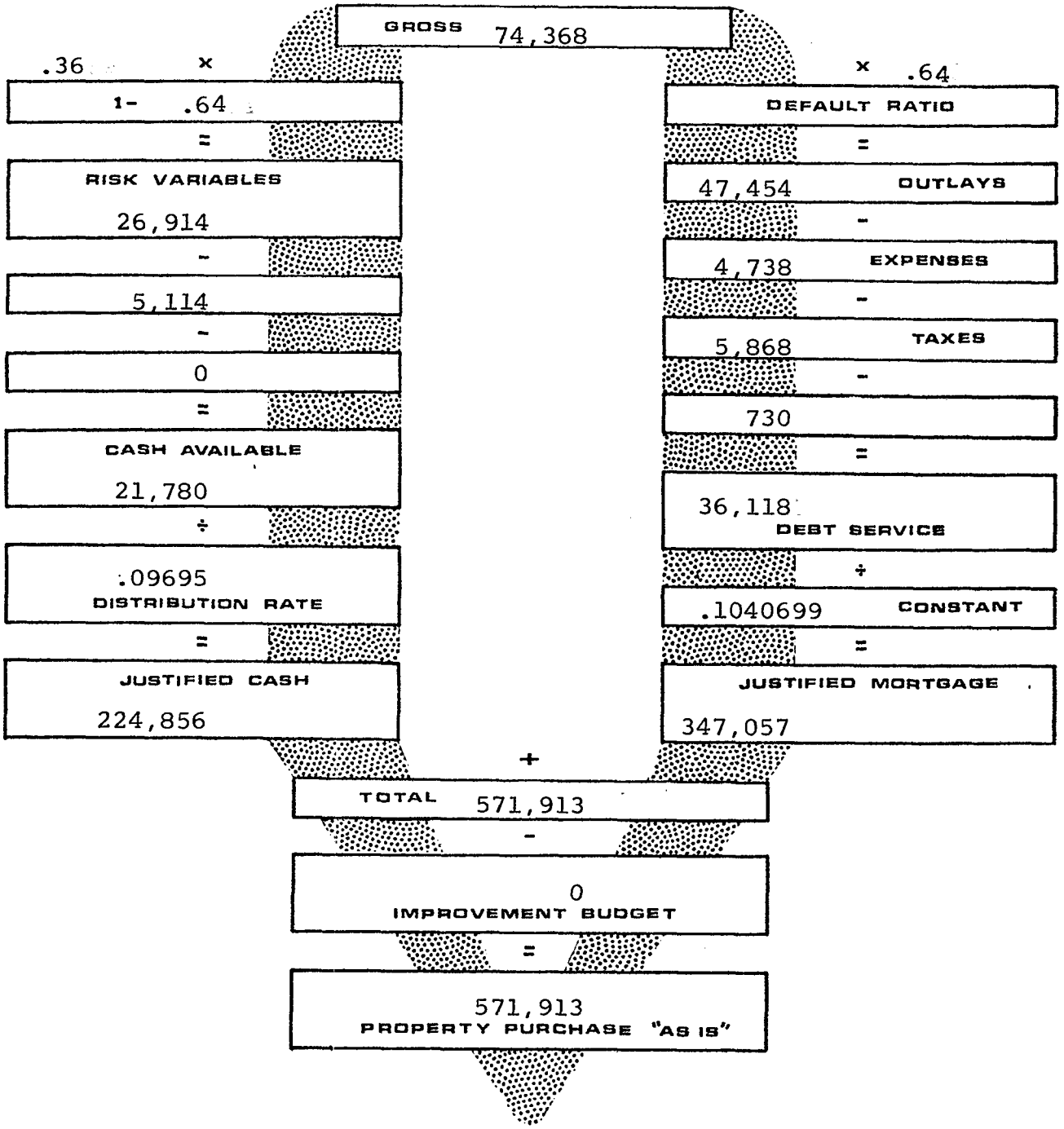

Loan To Value = .6068

Debt Coverage Ratio = 1.6036

Assignment

Solve for alternative Project Estimates by replacing the default ratio of the miscellaneous space with:

A. The average value for Category 2 - this means that the miscellaneous space will <u>eventually</u> be leased to the same type of tenants as currently exist in the building.

B. The average value for Category 3 - this means that the space will be rented to tenants somewhat different than existing tenants, i.e. new enterprises.

With the forms provided derive the Project Estimation and note the shift occurring in the parameters.

REVENUE JUSTIFIED CAPITAL BUDGET
DEFAULT RATIO APPROACH

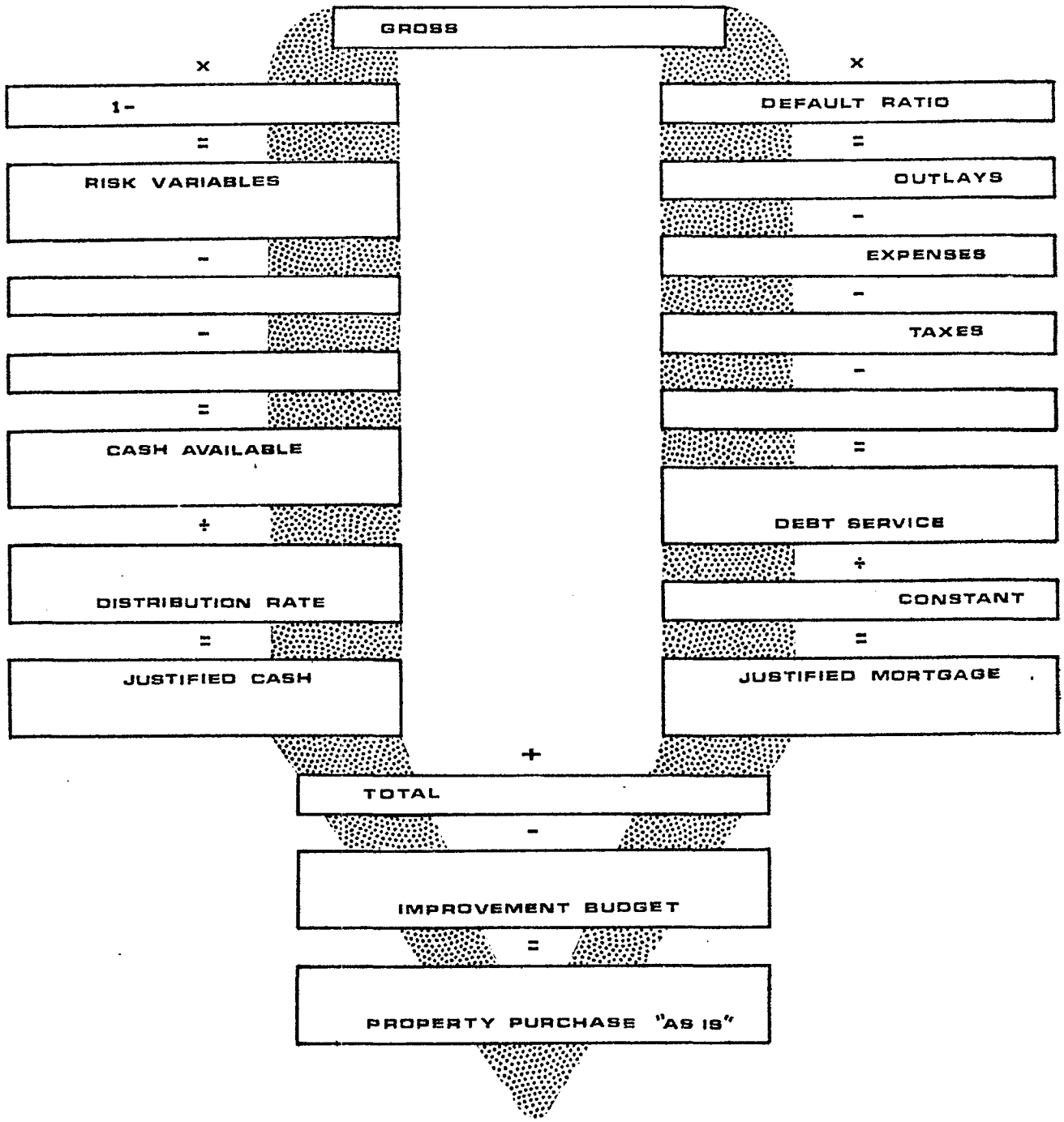

REVENUE JUSTIFIED CAPITAL BUDGET
DEFAULT RATIO APPROACH

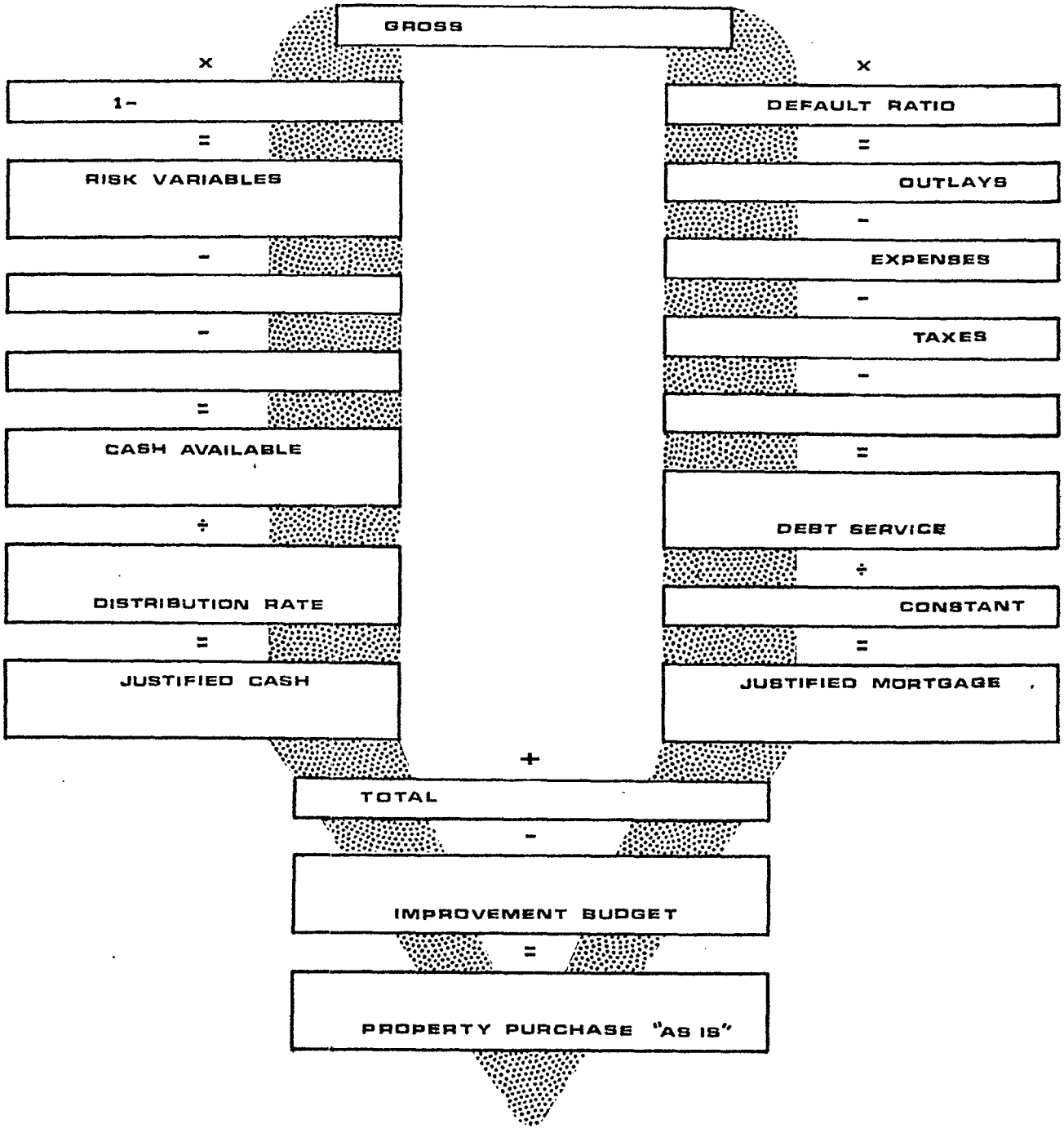

REVENUE JUSTIFIED CAPITAL BUDGET
DEFAULT RATIO APPROACH

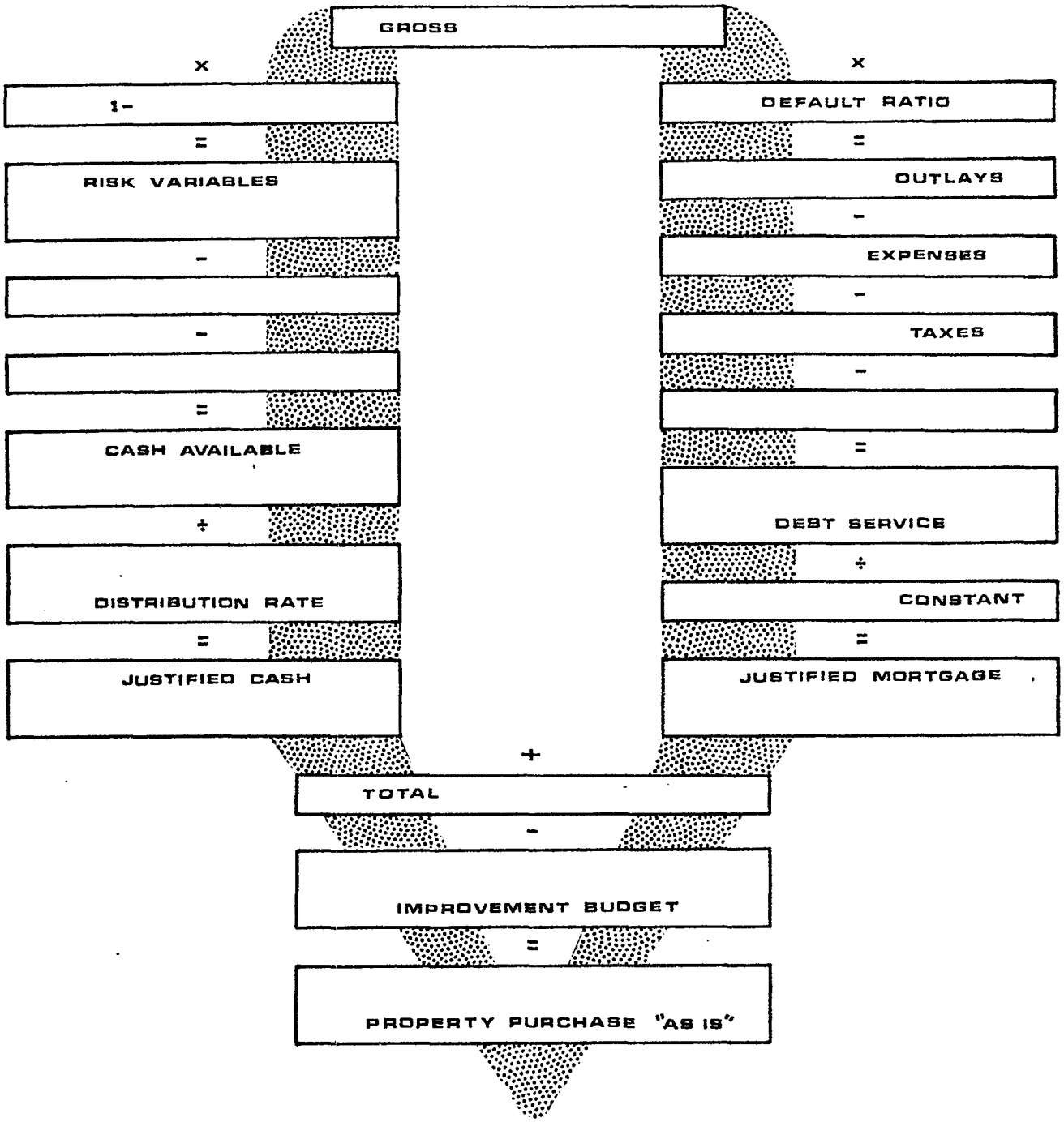

Exhibit 16

I. Elements of After Tax Synthesis

A. Identification of profit center trade level

B. Specification of the time line for outlays and receipts

C. The capital budget (source & application)
   1. Construction costs
   2. Carrying costs

D. Operating budgets (source & application)
   1. Pattern of sales revenues
   2. Fixed management costs
   3. General sales costs and investment

E. Financing plan
   1. Credit amounts and terms
   2. Equity amounts and terms
   3. Holding power

F. Profits classified as to type and tax
   1. Cash from operations
   2. Cash from capital gains
   3. Cash surplus from financing
   4. Cash from tax savings on other income
   5. Cash from reduction or shift of fixed outlays
   6. Indirect non-cash benefits

G. Selected measures of profitability
   1. Measures of spendable cash
   2. Measures of change in net worth without sale
   3. Measures of change in net worth after sale

Exhibit 15

SYSTEMATIC ESTIMATION OF FORECAST ANNUAL INCOME FOR AN INCOME-PRODUCING PROPERTY

PART I. ANNUAL RETURNS TO INVESTOR

BASIC APPRAISAL A LA SRA 201

A. ESTIMATE POTENTIAL GROSS CASH INCOME: CASH INCOME FROM SPACE SALES

B. DEDUCTIONS FROM POTENTIAL GROSS
   1. NORMAL VACANCY
   2. SEASONAL INCOME LOSS
   3. COLLECTION LOSSES
   4. FRANCHISE FEES, DEPOSITS RETURNED, ETC.

C. ADD "OTHER" INCOME FROM SERVICE SALES

D. DERIVE EFFECTIVE GROSS INCOME

E. DEDUCT OPERATING EXPENSES (ON EXPECTED CASH OUTLAY WITHOUT ACCRUAL RESERVES)
   1. FIXED EXPENSES
   2. VARIABLE EXPENSES
   3. REPAIRS AND MAINTENANCE
   4. REPLACEMENTS

F. DERIVE NET OPERATING INCOME

MORTGAGE EQUITY APPROACH

G. DEDUCT ANNUAL DEBT SERVICE
   1. CONTRACT INTEREST
   2. SUPPLEMENTARY VARIABLE INTEREST
   3. PRINCIPAL AMORTIZATION

H. DERIVE CASH THROW--OFF

PART I OF IMV INVESTMENT VALUE APPROACH

I. ADD BACK PRINCIPAL PAYMENTS AND REPLACEMENTS

J. DEDUCT TAX DEPRECIATION ALLOWANCE

K. DERIVE TAXABLE INCOME

L. DETERMINE MARGINAL INCOME TAX ON REAL ESTATE INCOME

M. DEDUCT INCOME TAX FROM CASH-THROW OFF (H)

N. DERIVE AFTER-TAX CASH FLOW

O. ADD TAX SAVINGS ON OTHER INCOME (IF K IS NEGATIVE)

P. ADD SURPLUS FROM REFINANCING

Q. DERIVE SPENDABLE AFTER-TAX CASH

PART II. RESALE RETURNS TO INVESTOR (OVER)

J. Graaskamp

PART II. RESALE RETURNS TO INVESTOR

A. ESTIMATED RESALE PRICE

B. DEDUCT BROKER'S COMMISSION AND OTHER TRANSACTION COSTS

C. DERIVE EFFECTIVE GROSS PROCEEDS FROM SALE

D. DEDUCT ALL CREDIT CLAIMS
   1. SHORT AND LONG TERM NOTE BALANCES DUE
   2. PREPAYMENT PENALTIES
   3. DEDUCT EQUITY SHARES TO NON-OWNER INTEREST

E. DERIVE PRE-TAX REVERSION TO EQUITY

F. DEDUCT TAX CLAIMS ON OWNERSHIP INTEREST
   1. DEDUCT CAPITAL GAINS TAX
   2. DEDUCT INCOME TAX ON DISALLOWED ACCELERATED DEPRECIATION
   3. DEDUCT SURTAX ON TAXABLE PREFERENTIAL INCOME

G. DERIVE AFTER TAX RESALE PROCEEDS TO INVESTOR

Exhibit 7

FRONT DOOR APPROACH

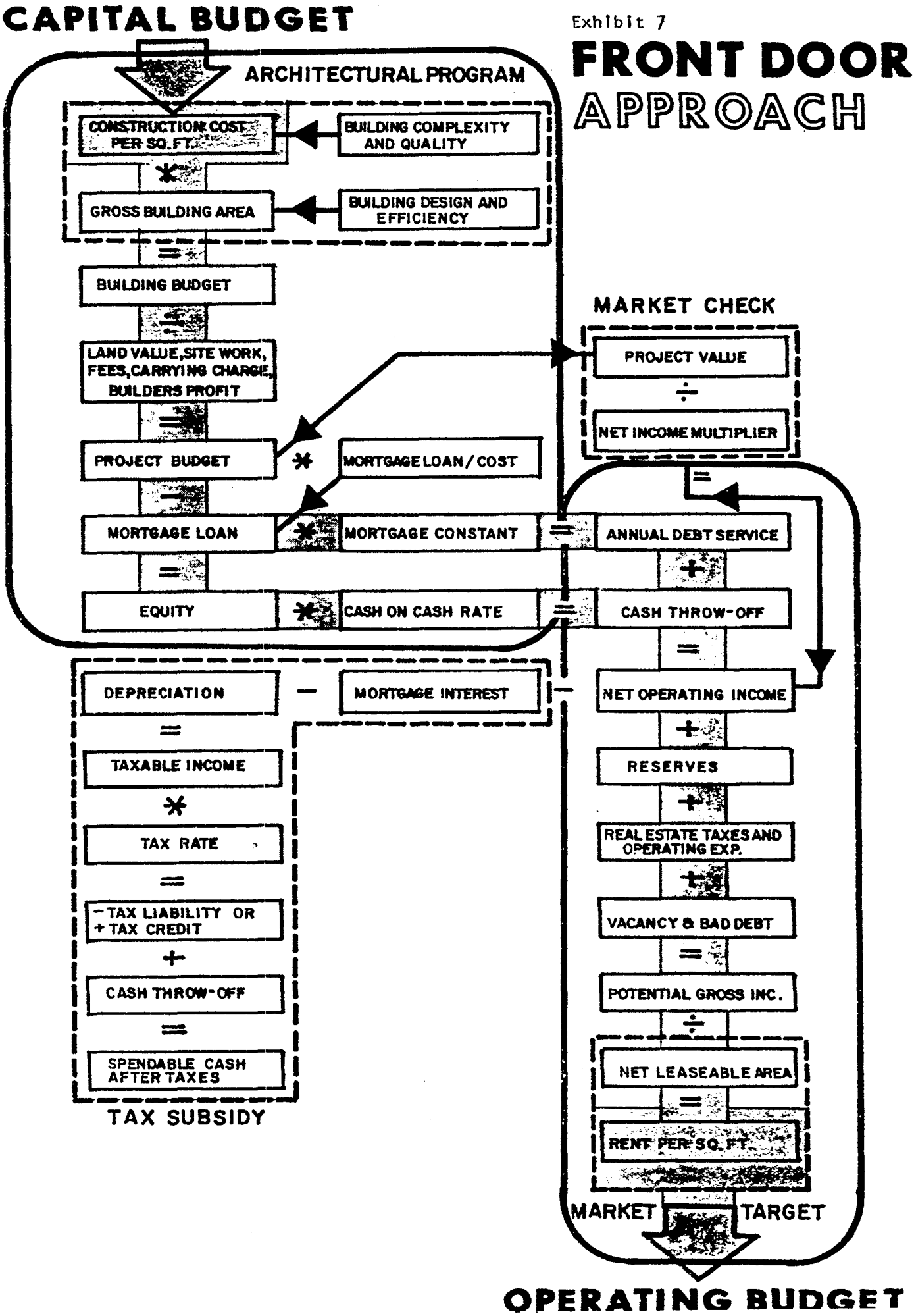

Exhibit 8

FRONT DOOR - MINIMUM RENT REQUIRED

$20/sq. ft.

X

20,000 sq. ft.

=

$400,000

÷

$200,000

=

$600,000

-

(80% LTV)

$480,000	X	(.1025 constant)	=	$49,200
				+
$120,000	X	.07	=	$8,400

=

$57,600

+

$2,400

+

$50,000

+

$6,000

=

$116,000 90% NLA

÷

$18,000

=

$6.44-6.50/sq.ft.

Default ratio:

$$\frac{\text{Debt service + expenses}}{\text{Gross rent}}$$

$$\frac{\$49,200 + 50,000}{\$116,000} = 86\%$$

Payback before taxes:

$$\frac{\text{Equity cash investment}}{\text{Equity dividend}}$$

$$\frac{120,000}{8,400} = 14+ \text{ yrs.}$$

Debt cover ratio:

$$\frac{\text{Net operating income*}}{\text{Debt service}}$$

$$\frac{60,000}{49,200} = 1.22$$

* NOI = gross rent - vacancy - expenses

Exhibit 9

BACK DOOR APPROACH

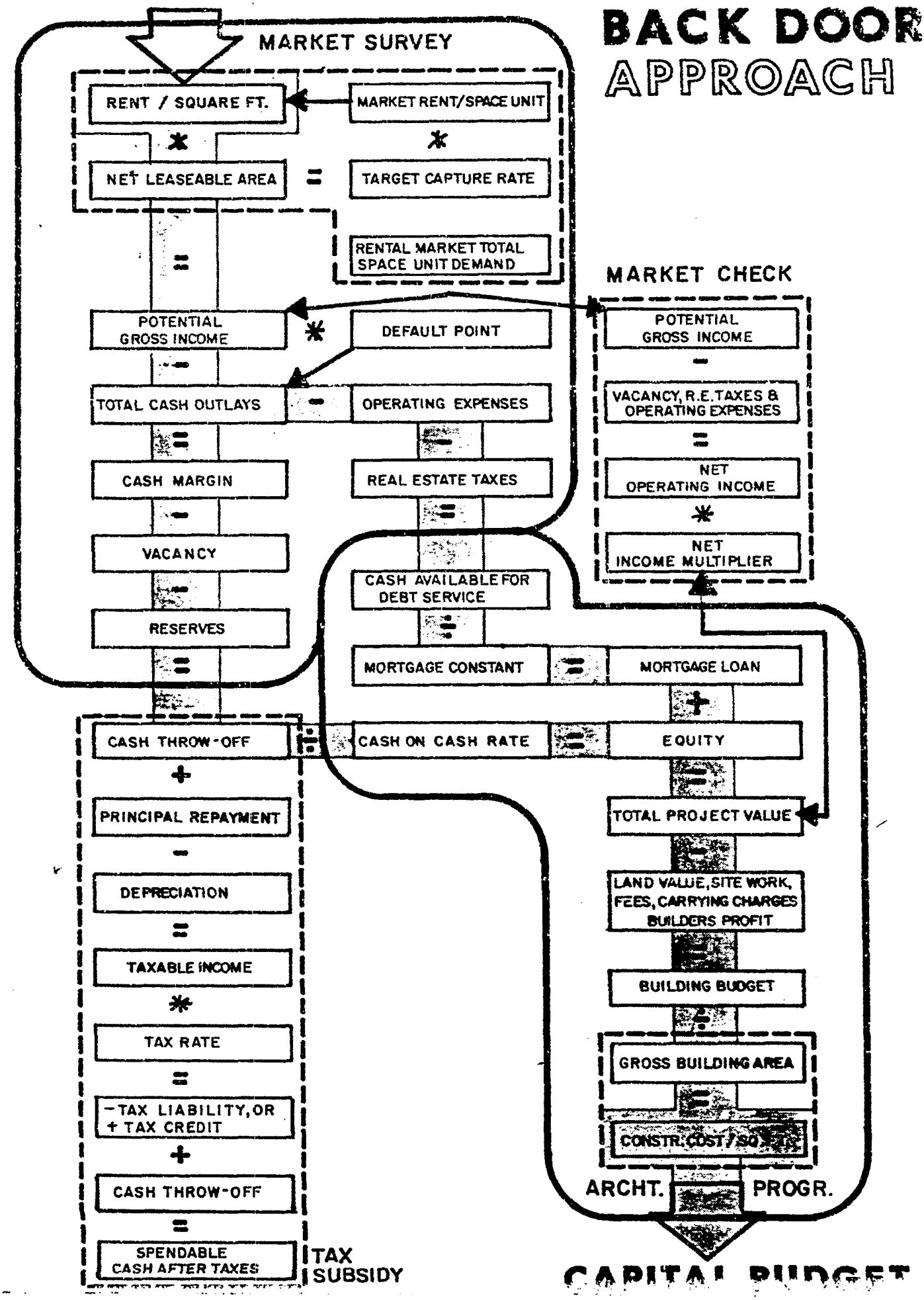

BACK DOOR - MAXIMUM JUSTIFIED BUDGET

Exhibit 10

$6.75/sq. ft.
X
$18,000
=

$121,500
-
$97,200
=
$24,300
-
$6,000
-
$2,400
=

$15,900 ÷

.80
-
$26,000
-
$24,000
=

$47,200
÷
.1025 = $460,500
+
.12 = $132,500
=
$592,500
-
$200,000
=
$392,500
÷
$20,000
=
$19.625 or
19.5/sq.ft.

Default ratio =

$$\frac{47,200 + 50,000}{121,500} = .80$$

Payback ratio:

$$\frac{132,500}{15,900} = 8.33 \text{ yrs.}$$

Debt cover ratio:

$$\frac{65,500}{47,200} = 1.39$$

```
HHHH
U#=WCE97120,
PASSWORD
[redacted]
ID:MIKE
EDUCARE COMPUTER NETWORK 03/11/79 13:51CST


USED      .98 UNITS
TYPE 6
READY
```

page 41 not found

```
RUN ELLWOOD

ELLWOOD     13:51CST    03/11/79

REVISED 6/17/75



 1 EQ YLD? ?
EQUITY YIELD RATE DESIRED
 1 EQ YLD? .09695
 2 PROJ PD? ?
PROJECTION PERIOD OF FORECAST IN YEARS
 2 PROJ PD? 1
MORTGAGE 1 DATA
 4 MTG INTR? ?
MORTGAGE INTEREST RATE; IF ALL MTGS ENTD PRESS RETURN
 4 MTG INTR? .1040699
 5 MTG PD? ?
TERM OF MORTGAGE IN YEARS, IF UNKNOWN PRESS RETURN
 5 MTG PD?
 6 MTG CON? ?
MORTGAGE CONSTANT; RATIO TOT.ANN.PMTS TO ORIG.MTGE AMT.
 6 MTG CON? .1040699
 7 PMT PDS/YR? ?
NUM OF PAYMENT PERIODS PER YEAR, EG 4=QUARTERLY
 7 PMT PDS/YR? 1
 10 M? ?
MORTGAGE AMT AS A % OF VALUE, IF UNKNOWN PRESS RETURN
 10 M? .623823
MORTGAGE 2 DATA
 14 MTG INTR?
 52 %DEPR(-APPR)? ?
% DEPREC. OF CURRENT VALUE OVER PROJ. PD; ENTER APPR NEG
 52 %DEPR(-APPR)? 0
 55 INC? ?
NET ANNUAL INCOME BEFORE R.E. TAXES
 55 INC? 57918
 53 % INCR INCOME? ?
% INCR IN INCOME DURING PROJ PD, IF CONST ENTER ZERO
 53 % INCR INCOME? 0
 58 EF.R.E.TX.R.? ?
EFFECTIVE REAL ESTATE TAX RATE (PART OF OAR), OR USE 0
 58 EF.R.E.TX.R.? 0
-.0071199 = MTG 1 C
 .1013916 = BASIC RATE
 .1013916 = OVERALL RATE
   571230 = VALUATION
MODE? P
```

```
MORTGAGE1  62%  356347 AT .1041   37084
   EQUITY  38%  214883 AT .0970   20833
         TOTAL  571230            57918 INCOME

571230 ORIGINAL PRICE
     0 LESS 0% DEPRECIATION
-------
571230 PROPERTY REVERSION, DEFERRED 1 YEARS
        356347 MORTGAGE 1
356347       0 LESS 1 YEAR AMORTIZA.ION; (0)
-------
214883 EQUITY REVERSION, DEFERRED 1 YEARS

PRESENT VALUE OF EQUITY INCOME AND REVERSION AT 9.695%

 18991 INCOME, 20833. X 0.911619
195892 REVERSION, 214884. X 0.911619
-------
214883 TOTAL
```

```
MODE? C
#,NEWVAL? 1,.0975
#,NEWVAL?
-.0065699 = MTG 1 C
 .1015985 = BASIC RATE
 .1015985 = OVERALL RATE
   570067 = VALUATION
MODE? C
#,NEWVAL? 1,.10
#,NEWVAL?
-.0040699 = MTG 1 C
 .1025389 = BASIC RATE
 .1025389 = OVERALL RATE
   564839 = VALUATION
MODE? C
#,NEWVAL? 1,.0950
#,NEWVAL?
-.0090699 = MTG 1 C
 .1006580 = BASIC RATE
 .1006580 = OVERALL RATE
   575393 = VALUATION
MODE? C
#,NEWVAL? 1,.0925
#,NEWVAL?
-.0115699 = MTG 1 C
 .0997176 = BASIC RATE
 .0997176 = OVERALL RATE
   580820 = VALUATION
MODE? C
#,NEWVAL? 1,.09695
#,NEWVAL? 10,.60
#,NEWVAL?
-.0071199 = MTG 1 C
 .1012219 = BASIC RATE
 .1012219 = OVERALL RATE
   572188 = VALUATION
MODE? C
#,NEWVAL? 10,.65
#,NEWVAL?
-.0071199 = MTG 1 C
 .1015779 = BASIC RATE
 .1015779 = OVERALL RATE
   570182 = VALUATION
MODE? C
#,NEWVAL? 10,.70
#,NEWVAL?
-.0071199 = MTG 1 C
 .1019339 = BASIC RATE
 .1019339 = OVERALL RATE
   568191 = VALUATION
MODE? C
#,NEWVAL? 10,.75
#,NEWVAL?
-.0071199 = MTG 1 C
 .1022899 = BASIC RATE
 .1022899 = OVERALL RATE
   566214 = VALUATION
MODE? Q
```

Summary Table

	Equity Yield	Mortgage %	Value
1.	.09695	.623823	571,230
2.	.0975	"	570,067
3.	.1000	"	564,839
4.	.0950	"	575,393
5.	.0925	"	580,820
6.	.09695	.60	572,188
7.	"	.65	570,182
8.	"	.70	568,191
9.	"	.75	566,214
10.			

```
USED     4.80 UNITS
/COST OFF

ACCRUED CHARGES SINCE SIGNIN
$  0.84 COMPUTER
   1.66 CONNECT
   0.41 CHARACTERS
  -1.03 EDU DISC
$  1.87 TOTAL
EFFICIENCY =  24.7
 00006.52  CRU    0000.12  TCH    0003.13  KC

OFF AT 13:58CST 03/11/79
```

1. Chemical Bank (Project Title) . Demo Problem (User Name)

10. 1979 (Starting Year) . 0 (Data Sets) . 1 (Classification) . 1.0 (% Owned Yr. 1) . 5 (Holding Period) . 14,560 (Units/Year)

40. 74,368 (Fixed Income) . * (2) . (3) . (4) . (5)

60. 5,114 (Vacancy Rate) . * (2) . (3) . (4) . (5)

70. 5868 (Real Estate Tax) . * (2) . (3) . (4) . (5)

80. 4,738 (Fixed Expenses) . * (2) . (3) . (4) . (5)

100. .09695 (Discount Rate) . .50 (Income Tax Rate) . .07 (Reinvestment Rate)

101. 0 (Extraordinary Exp.) . .0 (Project Growth Rate) . 5 (Project Growth Type)

102. .12 (Working Capital Loan) . 1 (Ownership) . .065 (Resale Cost Rate) . 0 (Charge New Capital)

COMPONENT ENTRIES

200, 1. Land (Title (20 character maximum))

201, 1. 87,304 (Original Cost) . .0 (% Depreciable) . 0 (Depreciation Method)

202, 1. 1 (Starting Year) . 0 (Useful Life) . 0 (Switching)

200, 2. Improvements (Title)

201, 2. 342,370 (Original Cost) . .90 (% Depreciable) . 4 (Depreciation Method)

202, 2. 1 (Starting Year) . 33 (Useful Life) . 0 (Switching)

200, 3. (Title)

201, 3. (Original Cost) . (% Depreciable) . (Depreciation Method)

202, 3. (Starting Year) . (Useful Life) . (Switching)

MORTGAGE ENTRIES

300, 1. First Mortgage (Title (20 character maximum))

301, 1. .75 (Principal Amount) . .09625 (Annual Interest) . 0 (Payment Period) . 27 (Term)

302, 1. 12 (Payments/Year) . 1 (Year Began) . 27 (Year End) . 0 (Refinanced by #)

303, 1. (Bonus Interest) . (Base Amount) . (Base Type) . (Mortgage Factor)

300, 2. (Title)

301, 2. (Principal Amount) . (Annual Interest) . (Payment Period) . (Term)

302, 2. (Payments/Year) . (Year Began) . (Year End) . (Refinanced by #)

303, 2. (Bonus Interest) . (Base Amount) . (Base Type) . (Mortgage Factor)

400, 1 (1) . 1 (2) . 1 (3) . 1 (4) . 1 (5) . (6) . (7) . (8) . (9) . (10)

403, 1 . 2 . 3 . 4 . . . . . .

999,99

Pages 48 - 53 not found

20. _____ , _____ , _____ , _____ , _____ , _____
Back-Door | Back-Door Loans | Investment Default | B/4 Tax | Beginning Year | End Year

= Back Door

0 = Do Not process through Back Door
1 = Derive value based on Default Ratio
2 = Derive value based on Loan-to-Value Mortgage
3 = Derive value based on Debt Coverage Ratio

30. _____ , _____ , _____ , _____ , _____ , _____
Default Ratio | Cash-On-Cash | Year | % Change | Equity B/4 Tax | Reserve B/4 Tax

103. 730 , .0 , .0 , .0
Reserves Witheld | Equity Reserves | Equity Reserve Rate | Reserve Maximum

Field #5 = Depreciation Method

0 = no depreciation
1 = sum of the years digits
2 = straight line
3 = 125% declining balance
4 = 150% declining balance
5 = 200% declining balance
6 = reverse sum of years digits
9 = equity modification
"–" = remove equity
"+" = add equity

= Bonus Basis Type

1 = fixed income - base amount
2 = gross rent - base amount
3 = effective gross rent - base amount
4 = fixed income - fixed expense - base amount
5 = net income - base amount
6 = cash throw - base amount * bonus interest rate
7 = market value - base amount * bonus interest rate
8 = B/4 net worth - base amount * bonus interest rate
9 = after tax net worth - base amount * bonus interest rate

Report Field Identifiers

Field #	Report Title	Field #	Report Title
1.	Summary of Income & Expense	6.	After Tax Ratios
2.	Component Summary	7.	Modified Internal Rate of Return
3.	Cash Flow	8.	Mortgage Amortization
4.	Market Value	9.	Depreciation Schedules
5.	Before Tax Ratios	10.	Partnership Report

* = Position #1 of Card 400

5 = Auto 1, 2, 3, 4, 5, 6, 7, 10

9 = Auto All

3 = Select Specific Line #'s (10 maximum)

PRINT YEARS (Enter any year number 1-25, in any order)

403 ____ , ____ , ____ , ____ , ____ , ____ , ____ , ____ , ____ , ____

99 = first entry line 403 means 10 year wide carriage output option.

```
1,CHEMICAL BANK,DEMO.PROBLEM
10,1979,0,1,1.0,5,14560
40,74368,*
60,5114,*
70,5868,*
80,4738,*
100,.09695,.50,.07
101,0,.0,5
102,.12,1,.065,0
103,730,.0,.0,.0
200,1,LAND
201,1,87304,.0,0
202,1,1,0,0
200,2,IMPROVEMENTS
201,2,342370,.90,4
202,2,1,33,0
300,1,FIRST MORTGAGE
301,1,.75,.09625,0,27
302,1,12,1,27,0
400,1,1,1,1,1,
403,1,2,3,4
999,99
#
```

P R O F O R M A

INVESTMENT ANALYSIS OF

CHEMICAL BANK

FOR

DEMO.PROBLEM

R E P O R T S E C T I O N N U M B E R 1

PAGE 1

* GROSS RENT	$ 74368.	* RATE OF GROWTH OF GROSS RENT	0.0000
* EXPENSES	$ 4738.	* RATE OF GROWTH OF EXPENSES	0.0000
* R E TAXES	$ 5868.	* RATE OF GROWTH OF R E TAXES	0.0000
* INCOME TAX RATE	0.5000	PROJECT VALUE GROWTH OF	5.0000
* VACANCY RATE	0.0688	WORKING CAPITAL LOAN RATE	0.1200
EQUITY DISCOUNT	0.0970	EXTRAORDINARY EXPENSES	$ 0.
RESALE COST	0.0650	REINVESTMENT RATE	0.0700
WKG CAPITAL RS	$ 0.	CAPITAL RESER INTEREST RATE	0.0000
INITIAL COST	$ 429674.	INITIAL EQUITY REQUIRED	$ 107419.

ALL '*' VALUES ARE AVERAGE AMOUNTS FOR HOLDING PERIOD. OF 5 YRS.

R E P O R T S E C T I O N N U M B E R 2

PAGE 1

C O M P O N E N T S U M M A R Y

TITLE	PCT. DEPR	BEGIN USE	USEFUL LIFE	DEPR METHOD	COST	SCH
LAND	0.00	1	0.	0	$ 87304.	0
IMPROVEMENTS	0.90	1	33.	4	$ 342370.	0

M O R T G A G E S U M M A R Y

TITLE	INTR RATE	BEGIN YR.	END YR.	TERM	ORIG BALC	PCT VALUE
FIRST MORTGAGE	0.0962	1	27	27	$ 322256.	0.750

P R O F O R M A

INVESTMENT ANALYSIS OF

CHEMICAL BANK

FOR

DEMO.PROBLEM

CASH FLOW ANALYSIS

		1979	1980	1981	1982
1	GROSS RENT	74368.	74368.	74368.	74368.
2	LESS VACANCY	5114.	5114.	5114.	5114.
3	LESS REAL ESTATE TAXES	5868.	5868.	5868.	5868.
4	LESS EXPENSES	4738.	4738.	4738.	4738.
5	NET INCOME	58648.	58648.	58648.	58648.
6	LESS DEPRECIATION	15562.	14855.	14180.	13535.
7	LESS INTEREST	30903.	30638.	30346.	30025.
8	TAXABLE INCOME	12183.	13155.	14122.	15088.
9	PLUS DEPRECIATION	15562.	14855.	14180.	13535.
10	LESS PRINCIPAL PAYMENTS	2634.	2899.	3191.	3512.
11	CASH THROW-OFF	25111.	25111.	25111.	25111.
12	LESS TAXES	6091.	6578.	7061.	7544.
13	LESS RESERVES AT 730.000	730.	730.	730.	730.
14	CASH FROM OPERATIONS	18290.	17803.	17320.	16837.
15	WORKING CAPITAL LOAN(CUM B)	0.	0.	0.	0.
16	DISTRIBUTABLE CASH AFR TAX	18290.	17803.	17320.	16837.
17	TAX SAVING ON OTHER INCOME	0.	0.	0.	0.
18	SPENDABLE CASH AFTER TAXES	18290.	17803.	17320.	16837.

REPORT SECTION NUMBER 4

CASH FLOW ANALYSIS

		1979	1980	1981	1982
	MARKET VALUE				
19	BY METHOD - 5 - AT 0.0000	429674.	429674.	429674.	429674.
20	LESS RESALE COST	27929.	27929.	27929.	27929.
21	LESS LOAN BALANCES	319621.	316722.	313531.	310019.
22	PLUS CUM. CASH RESERVES	730.	1460.	2190.	2920.
23	B/4 TAX NET WORTH	82854.	86483.	90404.	94646.
24	CAPITAL GAIN (IF SOLD)	-18591.	-9254.	83.	9421.
25	CAPITAL GAINS TAX	-3718.	-1851.	17.	1884.
26	TAX PREFERENCE TAX	0.	0.	0.	0.
27	INCOME TAX ON EXCESS DEP	3112.	5871.	8292.	10391.
28	TOTAL TAX ON SALE	1253.	4946.	8309.	12275.
29	AFTER TAX NET WORTH	81601.	81537.	82095.	82370.

REPORT SECTION NUMBER 5

YEAR OF ANALYSIS

		1979	1980	1981	1982
	BEFORE TAX RATIO ANALYSIS				
30	RETURN ON NET WORTH B/4 TAX	0.0051	0.3469	0.3357	0.3247
31	CHANGE IN NET WORTH B/4 TAX	-24565.	3629.	3921.	4242.
32	CASH RTN ON ORIG CASH EQUIY	0.2338	0.2338	0.2338	0.2338
33	PERCENT ORIG EQUITY PAYBACK	0.1703	0.3360	0.4972	0.6540
34	PRESENT VALUE OF PROJECT	420678.	437887.	453529.	467748.

REPORT SECTION NUMBER 6 PAGE 1

YEAR OF ANALYSIS	1979	1980	1981	1982
AFTER TAX RATIO ANALYSIS				
35 RETURN ON NEW WORTH AFT TAX	-0.0701	0.2174	0.2193	0.2084
36 CHANGE IN NET WORTH AFT TAX	-25818.	-63.	558.	276.
37 CASH RTN ON ORIG CASH EQUIY	0.1703	0.1657	0.1612	0.1567
38 PERCENT ORIG EQUITY PAYBACK	0.1703	0.3360	0.4972	0.6540
39 PRESENT VALUE OF PROJECT	413317.	421485.	429041.	435362.
40 NET INCOME-MARKET VALUE RTO	0.1365	0.1365	0.1365	0.1365
41 LENDER BONUS INTEREST RATE	0.0000	0.0000	0.0000	0.0000
42 DEFAULT RATIO	0.5936	0.5936	0.5936	0.5936

REPORT SECTION NUMBER 7 PAGE 1

YEAR OF ANALYSIS	1979	1980	1981	1982
MODIFIED INTERNAL RATE OF RETURN ANALYSIS				
RETURN ANALYSIS WITHOUT SALE				
41 CUM. AFT TAX SPENDABLE CASH	18290.	37373.	57309.	78158.
44 MOD. I.R.R. ON ORIG EQUITY	-0.8297	-0.4102	-0.1889	-0.0764
45 MOD. I.R.R. ON CUM. EQUITY	-0.8297	-0.4102	-0.1889	-0.0764
RETURN ANALYSIS WITH SALE				
46 CUM. CASH LESS ORIG EQUITY	-7528.	11492.	31985.	53110.
47 CUM. CASH LESS CUM. EQUITY	-7528.	11492.	31985.	53110.
48 MOD I.R.R. ON ORIG EQUITY	-0.0701	0.0521	0.0908	0.1057
49 MOD I.R.R. ON CUM. EQUITY	-0.0701	0.0521	0.0908	0.1057

VI. Property analysis to determine alternative uses

A. Elements of analysis are approached as an inductive research problem moving progressively from on-site facts to external conditions. The appraiser needs to examine the following elements in sequence: (See Exhibit 3)

1. Physical attributes of site and improvement.

2. Legal-political constraints on alternative uses.

3. Basic financial parameters of alternative uses.

4. Existence of effective market demand for remaining alternatives.

5. Comparative risk and return evaluation of alternatives for which there may be demand.

B. A physical analysis of inventory of site and improvement attributes should include the five following subsets:

1. Physical attributes (static) include site dimensions, soils, geology, topography, site improvements and capacity, and on-site flora and fauna.

2. Legal-political attributes include not only zoning and subdividing codes at the local level but also relevent federal, state, or private controls which might direct or restrict site use. As appropriate, the appraiser should note administrative patterns relevant to application of law to use of subject site.

3. Linkage attributes identify relationships of site to networks, populations or activities centers that might generate potential demand for the subject property.

4. Dynamic attributes are those attributes which exist in the mind of others in terms of status, anxiety, beauty, imagery, sentimentality or other perceptions which attach to the subject property to the degree that these are economically significant.

5. Environmental attributes of the site concern with off-site natural systems of which the subject property may be a part such as riparian rights, pollution down wind, storm water runoff, etc. Even the shadow cast by the structure off-site may become significant in the era of solar energy. Impacts on others may be perceptual (i.e. dynamic) or fiscal (legal-political) as well.

C. Static site attributes which begin to narrow the potential market to alternative uses should include both the facts and their implications for productive use in such topic areas as:

1. Size, shape, and lot area

2. Topography, soils, geology, slope stability, bearing capacity, septic suitability, potential for subsidance, etc.

3. Water table, wells, streams, ponds, storm water swales, shoreland edges, and bulkhead lines, flood plain designations, etc.

4. Flora and fauna which enhance marketability or which might cause environmental impact litigation

5. Concealed utility easements, old foundations, etc.

6. Existing on-site utility services and capacity

7. Access points to public thoroughfares or private right-of-ways

8. Site improvements such as paving, retaining walls, pedestrian paths, culverts, etc.

9. Landmark attributes or historical site features

D. An inventory of legal attributes should move from specific site controls imposed by local zoning ordinances to state and federal regulations as well as private controls which may intervene. The appraiser has an obligation to report foreseeable attitues or future legislation which will affect administration of these ordinances relative to future uses of the site.

1. All alternative setback lines and building envelope interpretations relative to site

2. Legal uses under applicable zoning and critical limitations of each relative to FAR, bulk, parking requirements, DU count, etc.

3. Special zoning options which may be available at owners option such as rezoning, downzoning, PUD zoning, etc.

4. Special controls imposed by extra-territorial zoning, tax conservancy commitments, subdivision process, urban renewal districts, tax increment districts, etc.

5. Special state or federal constraints under airport approach zone districts, harbor commissions, coastal zones, Office of Environmental Protection Agency, etc.

6. Public attitudes of public commissions for sewer, water, highway, planning, or building administration

7. Public and planning premises of community master plans relative to sprawl, restoration, redevelopment, and other land use priorities as these attitudes will affect administraion of the law

8. Existing or impending legislation relative to such matters as:

   a. Septic tank installation
   b. Water quality for ground water, water recharge areas, storm water runoff, salt water encroachment, etc.
   c. Air quality standards relative to use, HVAC performance, micro-climate interference, etc.
   d. Conservation of envrionmental edges, prime agricultural land, wet lands

9. Define physical system sub-systems

   a. Foundation system
   b. Structural system
   c. Floor system
   d. Ceiling system
   e. Roof system
   f. Exterior wall system
   g. Interior wall system
   h. Horizontal circulation sytsem (provacy, interaction, congestion, confusion)
   i. Vertical circulation system (handicapped code, cost, economy of scale and height)

10. Delineation of functional systems

    a. Bay spaces
    b. Module unit
    c. Ceiling heights
    d. Visual codes - such as mass, entrance, claustrophobic signals

11. Public controls on possible alternative special uses such as restaurants, places of public assembly, schools, etc.

EXHIBIT 3

SITE IN SEARCH OF A USE

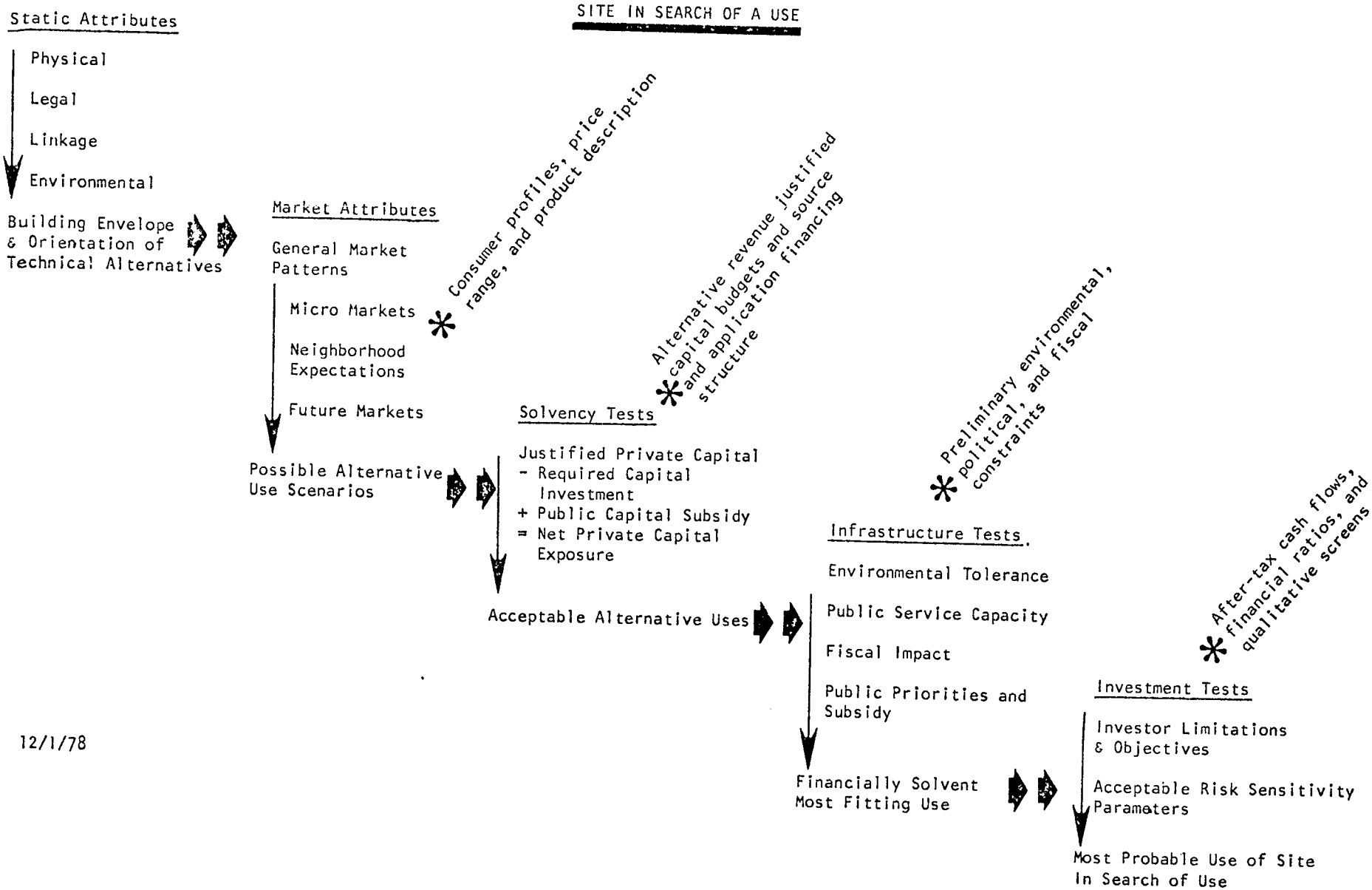

12/1/78

F. Analysis of the static and legal/political attributes of site and structure should be summarized in terms of competitive advantages and disadvantages of plausible alternative uses for costs, pricing, marketing, and political administration of compatibility.

1. Some static attributes may help identify most probable user types (Ex. special display window sizes may be suitable for antique or art display) while attributes will make certain uses unlikely (Ex. floor load limitations of fire proofing weights required of places of public assembly).

2. Some static or legal attributes can provide monopoly advantages because suitability is unique relative to lands all around it, because of exemption from certain regulations, or existing approvals of development plans, including licenses for dredging, building code variances, etc.

3. Some attributes lead to higher cost which the front door approach may reveal as leading to excessive rents or prices.

G. Linkage attributes relate to subject property to both networks of supporting infra-structure which contributes toward effective demand for the property as economic space time or the supply and demand impact of related activity centers which may interact with the subject property.

1. Analysis moves best from the borders of the subject property outward to expanding zones of potential demand or competitive supply.

2. Utility services are network linkages in terms of:

   a. Limitations on sewage processing, storm water retention or runoff constraints
   b. Community energy supplies, priorities, and capacity
   c. Water processing and chemistry as applicable
   d. Possible dependency on resources such as wild game and fish, underutilized labor pools, fire department coverage zones, etc.

3. Street, sidewalk, rail, and public transit systems including access points, traffic department controls, etc.

4. Relationship of subject site to contiguous properties, balance of city block, and neighborhood layout pattern.

5. Relationship of subject site to generators of potential needs and uses for the subject site, such as:

   a. Employment centers
   b. School system alternatives
   c. Retail services
   d. Complimentary existing nearby uses
   e. Recreational services
   f. Health care systems
   g. Security systems
   h. Waste disposal services

6. Neighborhood demographics (population, age, employment, income, etc.)

7. Relationship to competitive alternative and estimate of supply of available space, competitive ranking, and exposure of subject site to competitive interception of potential demand.

H. Dynamic attributes are those characteristics which exist in the minds of the beholder, which are mental or emotional responses which a site or project stimulates and which affect decision making behavior.

1. Image conditioning of the approach zone

2. Visual factors in terms of prominence of the site, views from the site, potential for controlled sight lines, etc.

3. Prestige and status

4. Anxiety factors of access and security

5. Noise as a function of traffic count (FHA noise pollution manual)

6. Prevailing air currents and airborne pollution (phosphate plants or sulphite paper mills, for example).

7. Political images established for a site by the public positions of local politicians or vested interest groups.

8. Historical community reputation and values attached to the project site and structures.

I. Environmental attributes of the site recognize that the real estate product today must respond not only to the needs of the individual consumer in the marketplace but to the collective community of consumers represented by the community political administrators. Land use must be sold to both "markets." If the proposal won't sell at City Hall, there will be little opportunity to market the product individually. Pre-architectural programs must not only consider physical factors of environmental impact off-site, but in addition:

1. Silhouette of social impact in terms of public perceptions of:

   a. Displacement of existing residents and neighborhood units
   b. Contribution to social integration or mobility barriers
   c. Contribution to land use heterogeneity
   d. Contribution to regional and community master plans

2. Fiscal impact on the community where appropriate:

   a. Direct impact on real estate tax revenues
   b. Direct impact on other governmental revenue
   c. Direct impact on incremental government
   d. Secondary contributions to local government revenues
   e. Secondary cost burdens created for local communities

3. Social factors in the ethical environment:

a. Impact on supply/demand equilibrium
b. Stamina of project sponsor in the face of public pressure
c. Vulnerability of potential project buyers to secondary political pressures and counter attack
d. Potential uses requiring unique political resources or private/public consortiums

J. For the experienced real estate analyst systamatic narrowing of alternative uses from study of the attributes leads to a limited series of alternatives which can then be given a final screening in terms of preliminary financial analysis and effective demand. The analyst may review these attributes to identify alternative uses by emphasizing one or more of the following angles of inquiry.

1. Does any site of site attributes suggest a special space/time - to money/time configuration? For example, a high floor area ratio but little parking may suggest a building with a low person occupancy, such as a switchboard building or luxury apartment with minimum number of dwelling units.

2. What attributes of the subject site provide monopoly characteristics or are inferior to alternative sites?

3. What patterns in adjacent or competitive structure represent a trend to which the subject property should adapt?

4. What patterns of use is revealed by transactions in similar properties on nearby locations?

K. A program of use or reuse can be called a scenario and may be suggested by physical characteristics of the property, contiguous property trends and conditions, or known supply shortages with which the appraiser is familiar.

L. Ranking of these scenarios for economic power is accomplished by means of the Back Door approach, i.e., the revenue justified investment for the property, as is alternative whrksheets for this approach using the default point and the debt cover ratio as the critical conversion of income to capital.

M. Economic power has to be qualified in terms of marketing risks and capital budgeting risks of each of the alternative uses before alternative uses can be ranked in summary fashion as in Exhibit 6.

1. Note that Exhibit 6 integrates the basic elements of preliminary feasibility analysis.

2. Remaining disucssion will emphasize market risk which is the primary cause of misleading appraisal conclusions

Case Study

Neighborhood Shopping Center

Preliminary Analysis

```
ELLWOOD     14:56CST    03/12/79

REVISED 6/17/75



 1 EQ YLD? .09695
 2 PROJ PD? 5
MORTGAGE 1 DATA
 4 MTG INTR? .1040699
 5 MTG PD?
 6 MTG CON? .1040699
 7 PMT PDS/YR? 1
 10 M? .75
MORTGAGE 2 DATA
 14 MTG INTR?
 52 %DEPR(-APPR)? 0
 55 INC? 166000
 53 % INCR INCOME? 0
 58 EF.R.E.TX.R.? 0
-.0071199 = MTG 1 C
 .1022899 = BASIC RATE
 .1022899 = OVERALL RATE
  1622838 = VALUATION
MODE? P




 MORTGAGE1  75% 1217129 AT .1041  126666
    EQUITY  25%  405709 AT .0969   39333
          TOTAL 1622838           166000 INCOME

1622838 ORIGINAL PRICE
      0 LESS 0% DEPRECIATION
-------
1622838 PROPERTY REVERSION, DEFERRED 5 YEARS
        1217129 MORTGAGE 1
1217129       0 LESS 5 YEAR AMORTIZATION; (0)
-------
 405709 EQUITY REVERSION, DEFERRED 5 YEARS

PRESENT VALUE OF EQUITY INCOME AND REVERSION AT 9.695%

 150274 INCOME, 39333.5 X 3.82051
 255435 REVERSION, 405709. X 0.629602
-------
 405709 TOTAL
```

Under What Conditions Will Appraised Value Be Justified

Equity Yield	.09695	.078378	.10159	.09695
Projection Period	5	5	5	5
Mortgage Interest	.1040699	.1040699	.09625	.09695
Mortgage Constant	.1040699	.1040699	.1040699	.1040699
Loan To Value	.75	.75	.75	.75
-Appreciation or Depreciation	.0	.0	.0	.007365
Income	166,000	166,000	166,000	166,000
Value	1,622,838	1,700,002	1,700,000	1,700,003
	A	**B**	**C**	**D**

A. Project "As Is", No Mortgage Amortization, No Appreciation.

B. No Mortgage Amortization, No Appreciation, Reduce Equity Rate to achieve Appraised Value.

C. Amortizing Mortgage, No Appreciation, Raise Equity Rate to achieve Appraised Value.

D. Amortizing Mortgage, Stated Equity Rate, Depreciate approximately .75% to achieve Appraised Value.

```
MODE? T
IS INCOME CONSTANT? YES
ENTER OVERALL RATE FOR ANAL.? .09695
ENTER 1 TO 4 PROJ. PDS? 1,2,4,5
ENTER 1 TO 6 EQ. YLDS? .06,.08,.10,.12,.15,.20
```

```
YIELD ANALYSIS WITH
CONSTANT INCOME,  0.0969500 = R
    YRS        1       2       4       5
YIELD
  0.0600 -0.0098 -0.0203 -0.0441 -0.0575
  0.0800 -0.0048 -0.0100 -0.0221 -0.0291
  0.1000  0.0002  0.0005  0.0013  0.0017
  0.1200  0.0052  0.0112  0.0260  0.0350
  0.1500  0.0127  0.0277  0.0658  0.0899
  0.2000  0.0252  0.0561  0.1399  0.1959
```

```
MODE? Q
```

```
MODE? C
#,NEWVAL? 52,.04
#,NEWVAL?
 .0006891 = MTG 1 C
 .0964332 = BASIC RATE
 .1030250 = OVERALL RATE
  1611259 = VALUATION
MODE? P
```

```
 MORTGAGE1  75% 1208445 AT .1041  125762
    EQUITY  25%  402814 AT .0999   40237
          TOTAL 1611259           166000 INCOME

1611259 ORIGINAL PRICE
  64450 LESS 4.% DEPRECIATION
-------
1546809 PROPERTY REVERSION, DEFERRED 5 YEARS
        1208445 MORTGAGE 1
1151181   57264 LESS 5 YEAR AMORTIZATION; (4.73861E-2)
-------
 395628 EQUITY REVERSION, DEFERRED 5 YEARS

PRESENT VALUE OF EQUITY INCOME AND REVERSION AT 9.695%

 153726 INCOME, 40237.2 X 3.82051
 249088 REVERSION, 395628. X 0.629602
-------
 402815 TOTAL
```

```
MODE? C
#,NEWVAL? 52,.193
#,NEWVAL?
 .0006891 = MTG 1 C
 .0964332 = BASIC RATE
 .1282386 = OVERALL RATE
  1294461 = VALUATION
MODE? P
```

```
 MORTGAGE1  75%  970846 AT .1041  101035
    EQUITY  25%  323615 AT .2007   64964
          TOTAL 1294461           166000 INCOME

1294461 ORIGINAL PRICE
 249831 LESS 19.3% DEPRECIATION
-------
1044630 PROPERTY REVERSION, DEFERRED 5 YEARS
         970846 MORTGAGE 1
 924841   46005 LESS 5 YEAR AMORTIZATION; (4.73861E-2)
-------
 119789 EQUITY REVERSION, DEFERRED 5 YEARS

PRESENT VALUE OF EQUITY INCOME AND REVERSION AT 9.695%

 248196 INCOME, 64964.2 X 3.82051
  75419 REVERSION, 119790. X 0.629602
-------
 323615 TOTAL
```

```
MODE? C
#,NEWVAL? 52,-.02
#,NEWVAL?
 .0006891 = MTG 1 C
 .0964332 = BASIC RATE
 .0931373 = OVERALL RATE
  1782315 = VALUATION
MODE? P
```

```
 MORTGAGE1  75% 1336737 AT .1041  139114
    EQUITY  25%  445578 AT .0603   26885
          TOTAL 1782315          166000 INCOME

1782315 ORIGINAL PRICE
 -35646 LESS -2.% DEPRECIATION
-------
1817961 PROPERTY REVERSION, DEFERRED 5 YEARS
        1336737 MORTGAGE 1
1273394   63343 LESS 5 YEAR AMORTIZATION; (4.73861E-2)
-------
 544567 EQUITY REVERSION, DEFERRED 5 YEARS

PRESENT VALUE OF EQUITY INCOME AND REVERSION AT 9.695%

 102717 INCOME, 26885.9 X 3.82051
 342860 REVERSION, 544568. X 0.629602
-------
 445578 TOTAL
```

```
MODE? Q
```

```
LIST

RATES1       16:18CST     03/11/79

100 1,1,79,-425000
110 12,30,79,33311
120 12,30,80,33311
130 12,30,81,33311
140 12,30,82,33311
150 12,30,83,33311
160 12,30,83,384530


READY
REP

READY
```

pp. 75-79 missing

```
LIST

RATES2      16:19CST    03/11/79

100 1,1,79,-142000
105 1,1,80,-141000
110 12,30,79,33311
115 1,1,81,-142000
120 12,30,80,33311
130 12,30,81,33311
140 12,30,82,33311
150 12,30,83,33311
160 12,30,83,384530


READY
REPLACE

READY
```

```
OLD RATES

READY
RUN


RATES       16:19CST    03/11/79

NUMBER OF COMPOUNDING PERIODS PER YEAR? 1




IF FILE INPUT, TYPE NAME; ELSE TYPE 'TERM'
? RATES1




FILE INPUT:
 1,1,79,-425000
 12,30,79,33311
 12,30,80,33311
 12,30,81,33311
 12,30,82,33311
 12,30,83,33311
 12,30,83,384530
PERIOD OF 4 YEARS, 11 MONTHS, 30 DAYS
FROM 1  1  79 TO 12  30  83
TOTAL OUTLAYS 425000
TOTAL RECEIPTS 551085
INTERNAL RATE IS 6.15793




ENTER COST OF CAP RATE? .09
NET PRESENT VALUE AT  9.00% IS *-45422.867
ADJUSTED RATE IS  6.56%
ENTER COST OF CAP RATE? .10
NET PRESENT VALUE AT 10.00% IS *-59865.559
ADJUSTED RATE IS  6.71%
ENTER COST OF CAP RATE? .11
NET PRESENT VALUE AT 11.00% IS *-73584.285
ADJUSTED RATE IS  6.86%
ENTER COST OF CAP RATE? .12
NET PRESENT VALUE AT 12.00% IS *-86622.152
ADJUSTED RATE IS  7.01%
ENTER COST OF CAP RATE?
```

```
IF FILE INPUT, TYPE NAME; ELSE TYPE 'TERM'
? RATES2



FILE INPUT:
 1,1,79,-142000
 1,1,80,-141000
 12,30,79,33311
 1,1,81,-142000
 12,30,80,33311
 12,30,81,33311
 12,30,82,33311
 12,30,83,33311
 12,30,83,384530
PERIOD OF 4 YEARS, 11 MONTHS, 30 DAYS
FROM 1  1  79 TO 12  30  83
TOTAL OUTLAYS 425000
TOTAL RECEIPTS 551085
INTERNAL RATE IS 8.04058



ENTER COST OF CAP RATE? .09
NET PRESENT VALUE AT  9.00% IS *-11299.223
ADJUSTED RATE IS  8.36%
ENTER COST OF CAP RATE? .10
NET PRESENT VALUE AT 10.00% IS *-22402.752
ADJUSTED RATE IS  8.70%
ENTER COST OF CAP RATE? .11
NET PRESENT VALUE AT 11.00% IS *-32861.699
ADJUSTED RATE IS  9.03%
ENTER COST OF CAP RATE? .12
NET PRESENT VALUE AT 12.00% IS *-42716.541
ADJUSTED RATE IS  9.37%
ENTER COST OF CAP RATE? .09,.10
NET PRESENT VALUE AT  9.00% IS *-11299.223
USING DISCOUNT PCTS 9. FOR OUTLAYS, AND 10. FOR RECIEPTS
ADJUSTED RATE IS  8.51%
ENTER COST OF CAP RATE?
```

```
IF FILE INPUT, TYPE NAME; ELSE TYPE 'TERM'
?

NOT ENOUGH INPUT--ADD MORE
?

USED     6.03 UNITS
/COST OFF

ACCRUED CHARGES SINCE SIGNIN
$  1.30 COMPUTER
   1.24 CONNECT
   0.44 CHARACTERS
  -0.84 EDU DISC
$  2.14 TOTAL
EFFICIENCY =  35.2
 00009.83  CRU    0000.09  TCH    0003.33  KC

OFF AT 16:22CST 03/11/79
```

INPUT FORM DAPCST

CONSTRUCTION ANALYSIS

PROGRAM DAP

100	1, 3, 11, 79	Bldg ID#, Mo, Day, Year
101	Chemical Bank	title (60 char.)
102	Shopping Center Case Study	title (centered)
103	255698	Gross sq ft or Acreage in tract
104	1	Run Number
201	0, 0	Shell -Sq Ft, $/Sq Ft
202	0, 0	Interior - Sq Ft, $/Sq Ft
203	60242, 19.69	Building - Sq Ft, $/Sq Ft
204	654.55, 275, .50	Grade Parking-Sq Ft/space, spaces, $/sq ft
205	0, 0, 0	Structured Parking- Ditto
206	0	Landscaping/Lighting Costs-$ or $/sq ft
207	0	Furniture, Fixtures & Equipment-$ or $/sq ft
208	0, 0	Sq ft,, $/sq ft or 0
(209)		Title (enter only if 208 is not 0, 0)
210	0, 0	Sq ft, $/sq ft or 0
(211)		Title (enter only if 210 is not 0, 0)
212	0, 0	Sq Ft, $/sq ft or 0
(213)		Title (enter only if 212 is not 0,.0)
214	74538, 0, 0	Other Costs:0,$, or % of lines 201+202+203
(215)	Restaurant	Title (if line 214, first value not =0)
(216)		Title (if line 214, 2nd value not = 0)
(217)		Title (if line 214, 3rd value not = 0)
218	0	Construction Contingency=0,$, or % of lines 201, or 202 + 203
301	0	Architecture Fees
302	0	Engineering Fees
303	20000	Loan Origination Fees
304	0	Legal & Closing Fees
305	0	Taxes & Insurance

Enter 0, $ or % of Subtotal of lines 201-218

	(A)	(B)	(C)	
309	10640	0	0	
(310)	Leasing Fees			Title for Cost A
(311)				Title for Cost B
(312)				Title for Cost C

Optionally titled fees and costs: 0, $, or % of subtotal of line 201-218

	(D)	(E)	
401	10	8	Construction Interim Int.Rate(%)Constr.Period(Mo)
402	0	0	Other expenses 0, $, or % of subtotal (not interim financed)
(403)			Title for Cost D
(404)			Title for Cost E

500	0	(0 or $) Cost of Land (or use line 501)
501	255698, 1.30	Cost of Land--square feet(or acres),$/sq ft(acre)
502	0, 0	Interim Interest: Rate (%), months
504	0, 0	Interim Land Cost - $/month, months
505	0	Other land costs-$ or % of Land Cost

```
LIST DAPCST

DAPCST      16:38CST    03/12/79

100 1,3,11,79
101                         CHEMICAL BANK
102                   SHOPPING CENTER CASE STUDY
103 255698
104 1
201 0,0
202 0,0
203 60242,19.690
204 654.55,275,.50
205 0,0,0
206 0
207 0
208 0,0
210 0,0
212 0,0
214 74538,0,0
215 RESTAURANT
218 0
301 0
302 0
303 20000
304 0
305 0
309 10640,0,0
310 LEASING FEES
401 10,8
402 0,0
500 0
501 255698,1.30
502 0,0
504 0,0
505 0

READY
```

INPUT FORM

DAPIN

PROGRAM DAP

CASH FLOW ANALYSIS

100 __1__ 0 or 1 (0=lines 101-107 required; 1=use construction data)
(101) _____, _____, _____, _____ Building ID#, Mon, Day, Year
(102) _____ Title Line 1
(103) _____ Title Line 2
Title Lines 1 and 2: up to 60 characters (centered).
(104) _____ Gross square footage in tract
(105) _____ Gross square footage in building
(106) _____ _____ Total construction cost
(107) _____ Run number
Lines 101-107 are entered only if value is 0 on line 100!

---

200 __5__ Number of Rental Rates (1 to 5)
201 __3.67__, __3.75__, __4.00__, __3.5__, __3.25__ Rental Rates ($ or $/sq ft or $/unit
202 __5__ Number of Vacancy Rates (1 to 5)
203 __3.77__, __4.0__, __5.0__, __6.0__, __3.0__ Vacancy Rates in %(eg.10)
204 __0__ Annual Parking Income (0 or $/year or $/unit)
205 __0__ Other Income (0 or $/year or $/unit)
206 __5__ Number of Operating Expenses (1 to 5)
207 __.77__, __.80__, __.90__, __1.0__, __.70__ Operating Expenses($ or $ sq ft or $/unit)
208 __5__ Number of Financing Conditions (0 to 5)
(209) __9.625__, __9.75__, __10.0__, __10.25__, __9.50__ Interest Rates(annual % eg. 9.5)
(210) __27__, __27__, __27__, __30__, __25__ Term in years
212 __5__ Number of Building Efficiency Rates (1 to 5)
213 __60242__, __62000__, __64000__, __66000__, __60000__ Efficiency Rates (% of gross footage)
214 __10__ Number of Cash Flow Tables (0 to 15)
Output Tables
(215) __1__, __2__
(216) __1__, __3__
(217) __1__, __4__
(218) __1__, __5__
(219) __1__, __6__
(220) __2__, __4__
(221) __3__, __4__
(222) __3__, __5__
(223) __3__, __6__
(224) __4__, __6__

Enter parameters to be output
1 Rental rate
2 Vacancy rate
3 Operating expense rate
4 Financing conditions
5 Building efficiency
6 Loan to cost ratios
7 Land lease costs
2XX __ROW__, __COLUMN__

230 __5__ Number of loan to cost ratios (1 to 5)
231 __75__, __78__, __80__, __72__, __70__ Loan ratios in % (eg. 85)
240 __1__ 1 or 2 (1=breakeven rental rates 2=return on equity)
250 __5000__ Equivalent Cash Flow Amount,(eg. 5000 or 20000 dollars)
260 __1__ Number of units in project (1-9999)
270 _____ Number of land lease expenses (0-5)
(271) _____, _____, _____, _____, _____
Land lease expenses (0, $, or $ per unit)
(280) _____ Land cost variable (omit, 0 or $)

Footnote: For explanation of use of lines 260-280, see Feb 1975 Newsletter.

```
LIST DAPIN

DAPIN        16:38CST    03/12/79

100 1
200 5
201 3.67,3.75,4.00,3.5,3.25
202 5
203 3.77,4.0,5.0,6.0,3.0
204 0
205 0
206 5
207 .77,.80,.90,1.0,.70
208 5
209 9.625,9.75,10.0,10.25,9.50
210 27,27,27,30,25
212 5
213 60242,62000,64000,66000,60000
214 10
215 1,2
216 1,3
217 1,4
218 1,5
219 1,6
220 2,4
221 3,4
222 3,5
223 3,6
224 4,6
230 5
231 75,78,80,72,70
240 1
250 5000
260 1
270 0

READY
```

```
RUN DAP

DAP         16:39CST    03/12/79



VERSION 5  APRIL 1, 1975

 THE PROGRAM  DAP  IS THE PROPERTY OF:
    JOHN H. NABORS, JR.
    ROGERS & BABLER, INC.
    4607 E. TUDOR ROAD
    ANCHORAGE, ALASKA 99507
    (907) 333-5512

ROYALTY CHARGE IS $ 5 PER EXECUTION AFTER *GO*

 ANSWER YES OR NO OR GIVE DATA FILE NAME

QUESTION NO.   QUESTION

  Q1:  IS THERE A CONSTRUCTION DATA FILE (YES OR NO)?YES

  Q2:  NAME OF CONSTRUCTION DATA FILE?DAPCST

  Q3:  LIST THE CONSTRUCTION INPUT DATA (YES OR NO)?YES

  Q4:  OUTPUT THE CONSTRUCTION COST SCHEDULE (YES OR NO)?YES

  Q5:  IS THERE A CASH FLOW DATA FILE (YES OR NO)?YES

  Q6:  NAME OF CASH FLOW DATA FILE:?DAPIN

  Q7:  LIST THE CASH FLOW INPUT DATA (YES OR NO)?YES

  Q8:  OUTPUT DEBT SERVICE CALCULATIONS (YES OR NO)?YES

  Q9:  OUTPUT THE CASH FLOW TABLES (YES OR NO)?YES

  Q10: OUTPUT THE SENSITIVITY TABLE (YES OR NO)?YES
```

INPUT DATA LISTING

```
BUILDING ID     1
DATE    3   11   79

TITLES                          CHEMICAL BANK

TITLES                    SHOPPING CENTER CASE STUDY

SQ FT IN TRACT 255698.00

RUN NO.    1

      CONSTRUCTION-SHELL          0. SQ FT AT $  0.        $
      CONSTRUCTION-INTERIOR       0. SQ FT AT $  0.        $
      TOTAL BUILDING COST     60242. SQ FT AT $ 19.69      $
GRADE PARKING    654.55SQFT    275.00SPACES @ $  0.50

STRUCT. PKING      0.  SQFT      0.  SPACES @ $  0.

LANDSCAPING        0.
FF AND E           0.

RESTAURANT                      74538.00

 FEES
ARCHITECTURE        0.
ENGINEERING         0.
LOAN FEES       20000.00
CLOSING COSTS       0.
TAXES AND INS        0.
OPTIONAL TITLE  OPTIONAL EXPENSES
LEASING FEES                    10640.00

      CONSTRUCTION INTERIM RATE    10.000 PCT
      CONSTRUCTION PERIOD     8 MONTHS
      LAND INTERIM RATE IS  0.   PCT
 255698.00 SQUARE FEET AT $      1.30

INTERIM RATE      0.   PCT FOR    0.   MONTHS

COST PER MONTH      0.   FOR   0.   MONTHS

OTHER LAND COSTS      0.
```

CONSTRUCTION COST ESTIMATE

CHEMICAL BANK

SHOPPING CENTER CASE STUDY

DATE: 3/11/ 79
BLDG: 1
RUN : 1

CONSTRUCTION COSTS		DOLLARS
TOTAL BUILDING COST	60242. SQ FT AT $ 19.69	$ 1186165.
GRADE PARKING	275. SPACES AT $ 327.	90001.
RESTAURANT		74538.
SUBTOTAL CONSTRUCTION		1350704.
LOAN ORIGINATION FEES	AT 1.5 PCT	20000.
LEASING FEES	AT 0.8 PCT	10640.
CUMULATIVE SUBTOTAL		1381344.
INTERIM INTEREST-CONSTRUCTION $ 1381344. AT 10.0 PCT FOR 8 MONTHS COMPOUNDED		52820.
TOTAL CONSTRUCTION COSTS		1434164.
LAND COSTS		
255698. SQ FT AT $ 1.30		332407.
INTERIM INTEREST-LAND		
TOTAL LAND COST		332407.
TOTAL LAND AND CONSTRUCTION COST		1766571.

INPUT DATA LISTING

BUILDING ID 1
DATE 3 11 79

TITLES

CHEMICAL BANK

SHOPPING CENTER CASE STUDY

SQ FT IN TRACT 255698.0
SQ FT IN BLDG 60242.0

CONSTRUCTION AND LAND COST 1766571.
BLDG. EFF. GREATER THAN 100% AND WILL BE INTERPRETED AS NET LEASEABLE SQUARE FEET
BLDG. EFF. GREATER THAN 100% AND WILL BE INTERPRETED AS NET LEASEABLE SQUARE FEET
BLDG. EFF. GREATER THAN 100% AND WILL BE INTERPRETED AS NET LEASEABLE SQUARE FEET
BLDG. EFF. GREATER THAN 100% AND WILL BE INTERPRETED AS NET LEASEABLE SQUARE FEET
BLDG. EFF. GREATER THAN 100% AND WILL BE INTERPRETED AS NET LEASEABLE SQUARE FEET

RUN NO.	1				
RENTAL RATES	3.67	3.75	4.00	3.50	3.25
VACANCY RATES	3.77	4.00	5.00	6.00	3.00
PARKING INCOME	0.				
OTHER INCOME	0.				
OPERATING EXPENSES	0.77	0.80	0.90	1.00	0.70
INTEREST RATES	9.625 PCT	9.750 PCT	10.000 PCT	10.250 PCT	9.500 PCT
LOAN LENGTH (YRS)	27.	27.	27.	30.	25.
BLDG EFFICIENCIES	100.00	102.92	106.24	109.56	99.60

OUTPUT TABLES
1 = RENTAL RATES 2 = VACANCY RATES
3 = EXPENSE RATES 4 = FINANCING CONDITIONS
5 = BLDG EFFICIENCY 6 = LOAN RATIOS
7 = LAND LEASE EXPENSE

1	2
1	3
1	4
1	5
1	6
2	4
3	4
3	5
3	6
4	6

LOAN TO COST RATIOS	75.00	78.00	80.00	72.00	70.00

IFX=1, BREAKEVEN RENTAL RATES WILL BE OUTPUT

EQUIVALENT CASH FLOW AMOUNT IS $ 5000.00

UNITS : 1.
LAND COST VARIABLE: 332407.

AMOUNT FINANCED $ 1324929. EQUITY $ 441643.

LOAN RATIO 75.00 PCT

INTEREST	TERM	CONSTANT	DEBT SERVICE ANNUAL	PER SQ FT	PER UNIT
9.625	27.0	10.4070	137885.	2.2889	
9.750	27.0	10.5140	139303.	2.3124	
10.000	27.0	10.7292	142154.	2.3597	
10.250	30.0	10.7532	142472.	2.3650	
9.500	25.0	10.4844	138910.	2.3059	

AMOUNT FINANCED $ 1377926. EQUITY $ 388646.

LOAN RATIO 78.00 PCT

INTEREST	TERM	CONSTANT	DEBT SERVICE ANNUAL	PER SQ FT	PER UNIT
9.625	27.0	10.4070	143401.	2.3804	
9.750	27.0	10.5140	144875.	2.4049	
10.000	27.0	10.7292	147840.	2.4541	
10.250	30.0	10.7532	148171.	2.4596	
9.500	25.0	10.4844	144467.	2.3981	

AMOUNT FINANCED $ 1413257. EQUITY $ 353314.

LOAN RATIO 80.00 PCT

INTEREST	TERM	CONSTANT	DEBT SERVICE ANNUAL	PER SQ FT	PER UNIT
9.625	27.0	10.4070	147078.	2.4414	
9.750	27.0	10.5140	148590.	2.4666	
10.000	27.0	10.7292	151631.	2.5170	
10.250	30.0	10.7532	151971.	2.5227	
9.500	25.0	10.4844	148171.	2.4596	

AMOUNT FINANCED $ 1271931. EQUITY $ 494640.

LOAN RATIO 72.00 PCT

INTEREST	TERM	CONSTANT	DEBT SERVICE ANNUAL	PER SQ FT	PER UNIT
9.625	27.0	10.4070	132370.	2.1973	
9.750	27.0	10.5140	133731.	2.2199	
10.000	27.0	10.7292	136468.	2.2653	
10.250	30.0	10.7532	136774.	2.2704	
9.500	25.0	10.4844	133354.	2.2136	

AMOUNT FINANCED $ 1236600. EQUITY $ 529971.

LOAN RATIO 70.00 PCT

INTEREST	TERM	CONSTANT	DEBT SERVICE ANNUAL	PER SQ FT	PER UNIT
9.625	27.0	10.4070	128693.	2.1363	
9.750	27.0	10.5140	130016.	2.1582	
10.000	27.0	10.7292	132677.	2.2024	
10.250	30.0	10.7532	132974.	2.2073	
9.500	25.0	10.4844	129650.	2.1521	

PRO FORMA CASH FLOW TABLE

CHEMICAL BANK

SHOPPING CENTER CASE STUDY

FIXED PARAMETERS

SITE : 255698. SQUARE FEET
BUILDING : 60242. SQUARE FEET
EFFICIENCY: 100.00 PCT(60242. SQ FT)
LOAN RATIO: 75.00 PCT OF $ 1766571.
LOAN : $ 1324929.
EQUITY : $ 441643.
FINANCING : 27. YEARS 9.625 PCT
OTR INCOME: $ 0. ANNUALLY
EXPENSES : $ 0.77 PER SQ FT

DATE 3-11- 79
BLDG 1
RUN 1

ANNUAL CASH FLOWS

VACANCY ALLOWANCE

RENTAL RATES ANNUAL $/SQ FT	3.00 PCT	3.77 PCT	4.00 PCT	5.00 PCT	6.00 PCT
$ 3.25	5641.	4134.	3683.	1726.	-232.
$ 3.50	20250.	18626.	18142.	16033.	13925.
$ 3.67	30184.	28482.	27973.	25762.	23551.
$ 3.75	34859.	33119.	32600.	30341.	28081.
$ 4.00	49467.	47612.	47058.	44648.	42238.

BREAKEVEN RENTAL RATES

VACANCY ALLOWANCE

RENTAL RATES ANNUAL $/SQ FT	3.00 PCT	3.77 PCT	4.00 PCT	5.00 PCT	6.00 PCT
	3.15	3.18	3.19	3.22	3.25

PRO FORMA CASH FLOW TABLE

CHEMICAL BANK

SHOPPING CENTER CASE STUDY

FIXED PARAMETERS

SITE : 255698. SQUARE FEET DATE 3-11- 79
BUILDING : 60242. SQUARE FEET BLDG 1
EFFICIENCY: 100.00 PCT(60242. SQ FT)
LOAN RATIO: 75.00 PCT OF $ 1766571.
LOAN : $ 1324929.
EQUITY : $ 441643.
FINANCING : 27. YEARS 9.625 PCT
VACANCY : 3.77 PCT OF LEASEABLE
OTR INCOME: $ 0. ANNUALLY RUN 1

ANNUAL CASH FLOWS

ANNUAL EXPENSE RATES PER SQ FT

RENTAL RATES ANNUAL $/SQ FT	$ 0.70	$ 0.77	$ 0.80	$ 0.90	$ 1.00
$ 3.25	8351.	4134.	2326.	-3698.	-9722.
$ 3.50	22843.	18626.	16819.	10795.	4771.
$ 3.67	32698.	28482.	26674.	20650.	14626.
$ 3.75	37336.	33119.	31312.	25288.	19264.
$ 4.00	51829.	47612.	45805.	39780.	33756.

BREAKEVEN RENTAL RATES

ANNUAL EXPENSE RATES PER SQ FT

RENTAL RATES ANNUAL $/SQ FT	$ 0.70	$ 0.77	$ 0.80	$ 0.90	$ 1.00
	3.11	3.18	3.21	3.31	3.42

PRO FORMA CASH FLOW TABLE

CHEMICAL BANK

SHOPPING CENTER CASE STUDY

FIXED PARAMETERS

SITE : 255698. SQUARE FEET DATE 3-11- 79
BUILDING : 60242. SQUARE FEET BLDG 1
EFFICIENCY: 100.00 PCT(60242. SQ FT)
LOAN RATIO: 75.00 PCT OF $ 1766571.
LOAN : $ 1324929.
EQUITY : $ 441643.
VACANCY : 3.77 PCT OF LEASEABLE
OTR INCOME: $ 0. ANNUALLY RUN 1
EXPENSES : $ 0.77 PER SQ FT

ANNUAL CASH FLOWS

FINANCING PARAMETERS

RENTAL RATES ANNUAL $/SQ FT	27. YEARS 9.62 PCT	27. YEARS 9.75 PCT	27. YEARS 10.00 PCT	30. YEARS 10.25 PCT	25. YEARS 9.50 PCT
$ 3.25	4134.	2716.	-135.	-453.	3109.
$ 3.50	18626.	17208.	14358.	14039.	17601.
$ 3.67	28482.	27063.	24213.	23894.	27456.
$ 3.75	33119.	31701.	28851.	28532.	32094.
$ 4.00	47612.	46194.	43343.	43025.	46587.

BREAKEVEN RENTAL RATES

FINANCING PARAMETERS

RENTAL RATES ANNUAL $/SQ FT	27. YEARS 9.62 PCT	27. YEARS 9.75 PCT	27. YEARS 10.00 PCT	30. YEARS 10.25 PCT	25. YEARS 9.50 PCT
	3.18	3.20	3.25	3.26	3.20

PRO FORMA CASH FLOW TABLE

CHEMICAL BANK

SHOPPING CENTER CASE STUDY

FIXED PARAMETERS

SITE	:	255698. SQUARE FEET	DATE 3-11- 79
BUILDING	:	60242. SQUARE FEET	BLDG 1
LOAN RATIO	:	75.00 PCT OF $ 1766571.	
LOAN	:	$ 1324929.	
EQUITY	:	$ 441643.	
FINANCING	:	27. YEARS 9.625 PCT	
VACANCY	:	3.77 PCT OF LEASEABLE	
OTR INCOME	:	$ 0. ANNUALLY	RUN 1
EXPENSES	:	$ 0.77 PER SQ FT	

ANNUAL CASH FLOWS

BUILDING EFFICIENCY (PCT OF GROSS)

99.60 PCT100.00 PCT102.92 PCT106.24 PCT109.56 PCT

LOAN TO COST RATIO

RENTAL RATES ANNUAL $/SQ FT	70.00 PCT	72.00 PCT	75.00 PCT	78.00 PCT	80.00 PCT
$ 3.25	17708.	12993.	3563.	4134.	8278.
$ 3.50	33586.	28390.	17998.	18626.	23194.
$ 3.67	44383.	38860.	27813.	28482.	33336.
$ 3.75	49464.	43787.	32432.	33119.	38109.
$ 4.00	65342.	59184.	46867.	47612.	53025.

BREAKEVEN RENTAL RATES

BUILDING EFFICIENCY (PCT OF GROSS)

99.60 PCT100.00 PCT102.92 PCT106.24 PCT109.56 PCT

LOAN TO COST RATIO

RENTAL RATES ANNUAL $/SQ FT	70.00 PCT	72.00 PCT	75.00 PCT	78.00 PCT	80.00 PCT
	2.97	3.04	3.19	3.18	3.11

PRO FORMA CASH FLOW TABLE

CHEMICAL BANK

SHOPPING CENTER CASE STUDY

FIXED PARAMETERS

SITE : 255698. SQUARE FEET DATE 3-11- 79
BUILDING : 60242. SQUARE FEET BLDG 1
EFFICIENCY: 100.00 PCT(60242. SQ FT)
FINANCING : 27. YEARS 9.625 PCT
VACANCY : 3.77 PCT OF LEASEABLE
OTR INCOME: $ 0. ANNUALLY RUN 1
EXPENSES : $ 0.77 PER SQ FT

ANNUAL CASH FLOWS

LOAN TO COST RATIO

RENTAL RATES ANNUAL $/SQ FT	70.00 PCT	72.00 PCT	75.00 PCT	78.00 PCT	80.00 PCT
$ 3.25	13326.	9649.	4134.	-1382.	-5059.
$ 3.50	27819.	24142.	18626.	13111.	9434.
$ 3.67	37674.	33997.	28482.	22966.	19289.
$ 3.75	42312.	38635.	33119.	27604.	23927.
$ 4.00	56804.	53127.	47612.	42096.	38420.

BREAKEVEN RENTAL RATES

LOAN TO COST RATIO

RENTAL RATES ANNUAL $/SQ FT	70.00 PCT	72.00 PCT	75.00 PCT	78.00 PCT	80.00 PCT
	3.02	3.08	3.18	3.27	3.34

PRO FORMA CASH FLOW TABLE

CHEMICAL BANK

SHOPPING CENTER CASE STUDY

FIXED PARAMETERS

SITE : 255698. SQUARE FEET
BUILDING : 60242. SQUARE FEET
EFFICIENCY: 100.00 PCT(60242. SQ FT)
LOAN RATIO: 75.00 PCT OF $ 1766571.
LOAN : $ 1324929.
EQUITY : $ 441643.
REVENUE : $ 3.67 PER SQ FT
OTR INCOME: $ 0. ANNUALLY
EXPENSES : $ 0.77 PER SQ FT

DATE 3-11- 79
BLDG 1
RUN 1

ANNUAL CASH FLOWS

FINANCING PARAMETERS

VACANCY RATES	27. YEARS 9.62 PCT	27. YEARS 9.75 PCT	27. YEARS 10.00 PCT	30. YEARS 10.25 PCT	25. YEARS 9.50 PCT
3.00 PCT	30184.	28766.	25915.	25597.	29159.
3.77 PCT	28482.	27063.	24213.	23894.	27456.
4.00 PCT	27973.	26555.	23704.	23386.	26948.
5.00 PCT	25762.	24344.	21494.	21175.	24737.
6.00 PCT	23551.	22133.	19283.	18964.	22526.

BREAKEVEN RENTAL RATES

FINANCING PARAMETERS

VACANCY RATES	27. YEARS 9.62 PCT	27. YEARS 9.75 PCT	27. YEARS 10.00 PCT	30. YEARS 10.25 PCT	25. YEARS 9.50 PCT
3.00 PCT	3.15	3.18	3.23	3.23	3.17
3.77 PCT	3.18	3.20	3.25	3.26	3.20
4.00 PCT	3.19	3.21	3.26	3.27	3.20
5.00 PCT	3.22	3.24	3.29	3.30	3.24
6.00 PCT	3.25	3.28	3.33	3.34	3.27

PRO FORMA CASH FLOW TABLE

CHEMICAL BANK

SHOPPING CENTER CASE STUDY

FIXED PARAMETERS

SITE : 255698. SQUARE FEET
BUILDING : 60242. SQUARE FEET
EFFICIENCY: 100.00 PCT(60242. SQ FT)
LOAN RATIO: 75.00 PCT OF $ 1766571.
LOAN : $ 1324929.
EQUITY : $ 441643.
REVENUE : $ 3.67 PER SQ FT
VACANCY : 3.77 PCT OF LEASEABLE
OTR INCOME: $ 0. ANNUALLY

DATE 3-11- 79
BLDG 1
RUN 1

ANNUAL CASH FLOWS

FINANCING PARAMETERS

EXPENSE RATES ANNUAL $/SQ FT	27. YEARS 9.62 PCT	27. YEARS 9.75 PCT	27. YEARS 10.00 PCT	30. YEARS 10.25 PCT	25. YEARS 9.50 PCT
$ 0.70	32698.	31280.	28430.	28111.	31673.
$ 0.77	28482.	27063.	24213.	23894.	27456.
$ 0.80	26674.	25256.	22406.	22087.	25649.
$ 0.90	20650.	19232.	16381.	16063.	19625.
$ 1.00	14626.	13208.	10357.	10039.	13601.

BREAKEVEN RENTAL RATES

FINANCING PARAMETERS

EXPENSE RATES ANNUAL $/SQ FT	27. YEARS 9.62 PCT	27. YEARS 9.75 PCT	27. YEARS 10.00 PCT	30. YEARS 10.25 PCT	25. YEARS 9.50 PCT
$ 0.70	3.11	3.13	3.18	3.19	3.12
$ 0.77	3.18	3.20	3.25	3.26	3.20
$ 0.80	3.21	3.23	3.28	3.29	3.23
$ 0.90	3.31	3.34	3.39	3.39	3.33
$ 1.00	3.42	3.44	3.49	3.50	3.44

PRO FORMA CASH FLOW TABLE

CHEMICAL BANK

SHOPPING CENTER CASE STUDY

FIXED PARAMETERS

SITE : 255698. SQUARE FEET DATE 3-11- 79
BUILDING : 60242. SQUARE FEET BLDG 1
LOAN RATIO: 75.00 PCT OF $ 1766571.
LOAN : $ 1324929.
EQUITY : $ 441643.
FINANCING : 27. YEARS 9.625 PCT
REVENUE : $ 3.67 PER SQ FT
VACANCY : 3.77 PCT OF LEASEABLE
OTR INCOME: $ 0. ANNUALLY RUN 1

ANNUAL CASH FLOWS

BUILDING EFFICIENCY (PCT OF GROSS)

99.60 PCT100.00 PCT102.92 PCT106.24 PCT109.56 PCT
LOAN TO COST RATIO

EXPENSE RATES ANNUAL $/SQ FT	70.00 PCT	72.00 PCT	75.00 PCT	78.00 PCT	80.00 PCT
$ 0.70	49003.	43340.	32013.	32698.	37676.
$ 0.77	44383.	38860.	27813.	28482.	33336.
$ 0.80	42403.	36940.	26013.	26674.	31476.
$ 0.90	35803.	30540.	20013.	20650.	25276.
$ 1.00	29203.	24140.	14013.	14626.	19076.

BREAKEVEN RENTAL RATES

BUILDING EFFICIENCY (PCT OF GROSS)

99.60 PCT100.00 PCT102.92 PCT106.24 PCT109.56 PCT
LOAN TO COST RATIO

EXPENSE RATES ANNUAL $/SQ FT	70.00 PCT	72.00 PCT	75.00 PCT	78.00 PCT	80.00 PCT
$ 0.70	2.90	2.97	3.12	3.11	3.04
$ 0.77	2.97	3.04	3.19	3.18	3.11
$ 0.80	3.00	3.07	3.22	3.21	3.14
$ 0.90	3.11	3.17	3.32	3.31	3.25
$ 1.00	3.21	3.28	3.43	3.42	3.35

PRO FORMA CASH FLOW TABLE

CHEMICAL BANK

SHOPPING CENTER CASE STUDY

FIXED PARAMETERS

SITE : 255698. SQUARE FEET DATE 3-11- 79
BUILDING : 60242. SQUARE FEET BLDG 1
EFFICIENCY: 100.00 PCT(60242. SQ FT)
FINANCING : 27. YEARS 9.625 PCT
REVENUE : $ 3.67 PER SQ FT
VACANCY : 3.77 PCT OF LEASEABLE
OTR INCOME: $ 0. ANNUALLY RUN 1

ANNUAL CASH FLOWS

LOAN TO COST RATIO

EXPENSE RATES ANNUAL $/SQ FT	70.00 PCT	72.00 PCT	75.00 PCT	78.00 PCT	80.00 PCT
$ 0.70	41891.	38214.	32698.	27183.	23506.
$ 0.77	37674.	33997.	28482.	22966.	19289.
$ 0.80	35867.	32190.	26674.	21159.	17482.
$ 0.90	29842.	26165.	20650.	15135.	11458.
$ 1.00	23818.	20141.	14626.	9110.	5434.

BREAKEVEN RENTAL RATES

LOAN TO COST RATIO

EXPENSE RATES ANNUAL $/SQ FT	70.00 PCT	72.00 PCT	75.00 PCT	78.00 PCT	80.00 PCT
$ 0.70	2.95	3.01	3.11	3.20	3.26
$ 0.77	3.02	3.08	3.18	3.27	3.34
$ 0.80	3.05	3.11	3.21	3.31	3.37
$ 0.90	3.16	3.22	3.31	3.41	3.47
$ 1.00	3.26	3.32	3.42	3.51	3.58

PRO FORMA CASH FLOW TABLE

CHEMICAL BANK

SHOPPING CENTER CASE STUDY

FIXED PARAMETERS

SITE : 255698. SQUARE FEET
BUILDING : 60242. SQUARE FEET
EFFICIENCY: 100.00 PCT(60242. SQ FT)
REVENUE : $ 3.67 PER SQ FT
VACANCY : 3.77 PCT OF LEASEABLE
OTR INCOME: $ 0. ANNUALLY
EXPENSES : $ 0.77 PER SQ FT

DATE 3-11- 79
BLDG 1
RUN 1

ANNUAL CASH FLOWS

LOAN TO COST RATIO

FINANCING	70.00 PCT	72.00 PCT	75.00 PCT	78.00 PCT	80.00 PCT
27.YR 9.62PCT	37674.	33997.	28482.	22966.	19289.
27.YR 9.75PCT	36350.	32636.	27063.	21491.	17777.
27.YR 10.00PCT	33690.	29899.	24213.	18527.	14736.
30.YR 10.25PCT	33393.	29593.	23894.	18195.	14396.
25.YR 9.50PCT	36717.	33013.	27456.	21900.	18196.

BREAKEVEN RENTAL RATES

LOAN TO COST RATIO

FINANCING	70.00 PCT	72.00 PCT	75.00 PCT	78.00 PCT	80.00 PCT
27.YR 9.62 PCT	3.02	3.08	3.18	3.27	3.34
27.YR 9.75 PCT	3.04	3.11	3.20	3.30	3.36
27.YR 10.00 PCT	3.09	3.15	3.25	3.35	3.42
30.YR 10.25 PCT	3.09	3.16	3.26	3.36	3.42
25.YR 9.50 PCT	3.04	3.10	3.20	3.29	3.36

SENSITIVITY TABLE

CHEMICAL BANK

SHOPPING CENTER CASE STUDY

FIXED PARAMETERS

```
SITE      :   255698. SQUARE FEET          DATE   3-11-  79
BUILDING  :    60242. SQUARE FEET          BLDG        1
EFFICIENCY:  100.00 PCT OF GROSS
LOAN RATIO:   75.00 PCT OF $  1766571.
EQUITY    :   $   441643.
FINANCING :   27. YEARS  9.625 PCT
REVENUE   :   $  3.67 PER SQ FT
VACANCY   :    3.77 PCT OF LEASEABLE
PARK/OTHER:   $       0. ANNUALLY          RUN        1
EXPENSES  :   $  0.77 PER SQ FT
CONSTRUCTION AND LAND COST  1766571.
CONSTRUCTION INTERIM RATE    10.000 PCT
CONSTRUCTION PERIOD           8 MONTHS
LAND INTERIM RATE IS          0.   PCT
```

EFFECT OF SELECTED CHANGES IN PARAMETERS

PARAMETER CHANGE	INCREASE IN CASH FLOW	EFFECT ON CONSTRUCTION
DECREASE CONSTRUCTION COST $ 100,000	$ 11050.	$ -106179.
DECREASE CONSTRUCTION $ 1.00 PER SQ FT	6657.	-63964.
INCREASE CONSTRUCTION PERIOD 1 MONTH	-1198.	11511.
DECREASE CONST AND LAND INTERIM 1 PCT	590.	-5673.
DECREASE TOTAL LAND COST BY $ 332407.	34594.	
INCREASE BUILDING EFFICIENCY 1 PCT	1664.	
INCREASE RENTAL RATE $ .10 PER SQ FT	5797.	
DECREASE VACANCY RATE 1PCT	2211.	
DECREASE OPERATING RATE $ .10 PER SQ FT	6024.	
DECREASE PERMANENT RATE .25PCT	2821.	
DECREASE PERMANENT LOAN TERM BY 1 YEAR	-1136.	
DECREASE PERMANENT LOAN TERM BY 5 YEARS	-7252.	
DECREASE THE LOAN RATIO BY 5 PERCENT	9192.	

EQUIVALENT EFFECT TO YIELD
A $ 5000. INCREASE IN ANNUAL CASH FLOW

```
DECREASE CONSTRUCTION COSTS BY  $       45249.
DECREASE CONSTRUCTION COST BY   $  0.75 PER SQ FT
DECREASE LAND COST (NO INTERIM) BY $    48045.
DECREASE CONSTRUCTION PERIOD BY    4.2 MONTHS
DECREASE INTERIM INTEREST BY       8.47 PCT
INCREASE BUILDING EFFICIENCY BY    3.01 PCT
INCREASE RENT RATE BY           $  0.09 PER SQ FT
DECREASE VACANCY BY                2.26 PCT
DECREASE EXPENSE RATE BY        $  0.08 PER SQ FT
DECREASE PERMANENT RATE BY         0.44 PCT
INCREASE PERMANENT LOAN TERM BY    3.4 YEARS
DECREASE LOAN RATIO BY             2.7 PERCENT
```

CASH FLOW PRO FORMA USING PARAMETER NORMS

CHEMICAL BANK

SHOPPING CENTER CASE STUDY

DATE: 3/11/ 79
BLDG: 1
RUN : 1

GROSS SQUARE FEET IN BUILDING: 60242.
BUILDING EFFICIENCY : 100.0 PCT
NET LEASEABLE SQUARE FOOTAGE : 60242.

LAND AND CONSTRUCTION COST : $ 1766571.
LOAN TO COST RATIO : 75.0 PCT
ORIGINAL LOAN AMOUNT : $ 1324929.

EQUITY REQUIREMENT : $ 441643.

PERMANENT INTEREST RATE : 9.625 PCT
TERM OF LOAN 27. YEARS

ANNUAL DEBT SERVICE : $ 137885.

	ANNUAL DOLLARS
GROSS INCOME : 60242. SQ FT AT $ 3.67	221088.
LESS: VACANCY OF 3.77 PCT	8335.
GROSS EFFECTIVE INCOME	212753.
OPERATING EXPENSES: 60242. SQ FT AT $ 0.77	46386.
NET OPERATING INCOME	166367.
DEBT SERVICE (10.41 PCT CONSTANT)	137885.
PRO FORMA CASH FLOW	28482.

RETURN ON EQUITY 6.45 PERCENT

DEBT SERVICE COVERAGE: 1.207

DEFAULT RATIO : 83.35 PERCENT

PROGRAM STOP AT 17870

USED 17.97 UNITS
/COST OFF

ACCRUED CHARGES SINCE SIGNIN
$ 3.82 COMPUTER
6.35 CONNECT
5.70 CHARACTERS
$ 15.87 TOTAL
EFFICIENCY = 89.8
00028.09 CRU 0000.46 TCH 0041.46 KC

OFF AT 16:59CST 03/12/79

A SYSTEMATIC APPROACH TO INCOME PROPERTY LOANS

I. While the eventual mortgage loan negotiated should contain at least two of the pleasure, pain and bailout components to control dynamic risks, analysis begins with the property, the conversion of space time to money time, the parties in terms of development, tenant, and investor, and then finally the capital package proposed to finance the enterprise.

   A. The first question is how efficiently the proposed use exploits the positive attributes of the site and neutralizes the negative factors. If it doesn't work physically, it won't work to provide adequate security financially. There is no sense in increasing the probability of loss from failing to control variables that are management's to control when there are so many outside factors that cannot be adequately predicted or controlled.

   B. Given a shopping center, the analyst may review property attributes in the following order:

      1. Offsite linkages
      2. Site dynamics
      3. Physical site attributes
      4. Onsite access, parking, walking, and delivery
      5. Structural layout and basic revenue unit of space time
      6. Aesthetic compatibiltiy
      7. Environmental compatibility
      8. Legal-political constraints

   C. Note that a particular use as proposed is concerned with efficiency in the design and friction which it may create or must overcome in the movement of the goods and people on and off the site. Peak loads or frequencies for some uses may be cyclical in time of utilization.

   D. Efficiency of the concept as proposed not only measures financial possibilities, but is most revealing about the abilities and attitudes of the prospective borrower and his advisors.

II. Review of the physical product also suggests how well the borrower understands the profile and specifications of his prospective customer.

   A. "Who needs it?" determines the fundamental revenue stream on which all else is predicated. The profile suggests the scale of the project, the timing of the project, the rent levels, and the competitive standard of facilities expected.

   B. While the competitive standard suggests minimum requirements, it is the competitive edge which creates some element of monoply for the project which is critical to its marketing success. Free enterprise is the art of creating a monopoly, if only in the mind of the buyer for a moment, which will protect against cutting margins or spreads as a competitive device.

C. A competitive edge is found in location and physical features or services which reduce inconvenience, inefficiency, discomfort, or anxiety, i.e. friction between the consumer and his environment of sufficient irritation to overcome inertia, habit, or the status quo.

III. For many commercial buildings the stability of the revenue stream is inherent in the lease terms because beyond property description and price, a lease is nothing but a risk management approach to the "what ifs" down the road.

A. What contingencies precedent to occupancy cancel the lease?

B. What contingencies following occupancy abate the rents?

C. What contingencies following occupancy terminate the lease?

D. What penalties are provided for cancelation, overstay, or failure to pay rents on time or inappropriate amounts as adjustments are indicated?

E. What contingencies trigger and adjust escalator clauses?

F. What reporting mechanisms are required to monitor the basis for rents, cost allocation, or other financial adjustments required in the future?

G. What is the measure of tenant performance - payment, minimum occupancy in operation, sales per quare foot, etc?

H. Lease terms are also critical to determining budgets of expenses for the borrower/developer, in terms of capital improvements and operating expenses included in base rent.

1. All operating expenses with a tendancy to fluctuate should be laid off on the tenant through escalators or short-term leases or design to permit metering of services and utilities.

2. Where appropriate, mechanical replacements or modifications for energy efficiency, etc. should also be shared with the tenant.

3. Minor costs of management are presumably compensated by indexing of the base rent, renegotiation of short-term leases, or improving price earnings ratios.

IV. If the physical and legal project would be productive as presented, much has already been learned about the developer, his principle tenants, and perhaps some of the investors. The question remains whether they have sufficiently balanced personalities to review suggestions by the lenders and the financial resources to make good on their undertaking.

A. Position of their profit centers in time will skew their attitude toward suggestions for design modification and their tolerance for extra cost in product development.

B. Their experience in previous projects should reveal their natural aptitudes and their learning curve.

C. Analysis of the credit statements may reveal their needs for cash from various aspects of the project and therefore, the degree to which the vested interest of the lender and the borrower parallel each other in time.

D. A project which has justified economic productivity and a good faith developer can always be financed with appropriate packaging regardless of the net worth of the borrower/developer.

1. Chemical Bank Seminar . Case Problem-Gen.
Project Title — User Name

10. 1979 . 0 . 1 . 1.0 . 5 . 60242
Starting Year — Data Sets — Classification — % Owned Yr. 1 — Holding Period — Units/Year

40. 220893 . * . . . .
Fixed Income — 2 — 3 — 4 — 5

60. 8339 . * . . . .
Vacancy Rate — 2 — 3 — 4 — 5

70. 24097 . * . . . .
Real Estate Tax — 2 — 3 — 4 — 5

80. 19457 . * . . . .
Fixed Expenses — 2 — 3 — 4 — 5

100. .12 . .50 . .07
Discount Rate — Income Tax Rate — Reinvestment Rate

101. 0 . .015 . 6
Extraordinary Exp. — Project Growth Rate — Project Growth Type

102. .14 . 1 . .06 . 0
Working Capital Loan — Ownership — Resale Cost Rate — Charge New Capital

COMPONENT ENTRIES

200. 1. Land
Title (20 character maximum)

201. 1. 332,400 . .0 . 0
Original Cost — % Depreciable — Depreciation Method

202. 1. 1 . 0 . 0
Starting Year — Useful Life — Switching

200. 2. Improvements
Title

201. 2. 1431968 . .90 . 2
Original Cost — % Depreciable — Depreciation Method

202. 2. 1 . 33 . 0
Starting Year — Useful Life — Switching

200. 3.
Title

201. 3. . . .
Original Cost — % Depreciable — Depreciation Method

202. 3. . . .
Starting Year — Useful Life — Switching

MORTGAGE ENTRIES

300. 1. First Mortgage
Title (20 character maximum)

301. 1. .75 . .09625 . 0 . 27
Principal Amount — Annual Interest — Payment Period — Term

302. 1. 12 . 1 . 27 . 0
Payments/Year — Year Began — Year End — Refinanced by #

303. 1. . . . .
Bonus Interest — Base Amount — Base Type — Mortgage Factor

300. 2.
Title

301. 2. . . . .
Principal Amount — Annual Interest — Payment Period — Term

302. 2. . . . .
Payments/Year — Year Began — Year End — Refinanced by #

303. 2. . . . .
Bonus Interest — Base Amount — Base Type — Mortgage Factor

400, 5 . . . .
1 — 2 — 3 — 4 — 5 — 6 — 7 — 8 — 9 — 10

403, 1 . 2 . 3 . 5 . . . . . .

999,99

20. _____ . _____ . _____ . _____ . _____ . _____
Back-Door | Back-Door Loans | Investment Default | B/4 Tax | Beginning Year | End Year

= Back Door

0 = Do Not process through Back Door
1 = Derive value based on Default Ratio
2 = Derive value based on Loan-to-Value Mortgage
3 = Derive value based on Debt Coverage Ratio

30. _____ . _____ . _____ . _____ . _____ . _____
Default Ratio | Cash-On-Cash | Year | % Change | Equity B/4 Tax | Reserve B/4 Tax

103. 3000 . .0 . .07 . 0
Reserves Witheld | Equity Reserves | Equity Reserve Rate | Reserve Maximum

Field #5 = Depreciation Method

0 = no depreciation
1 = sum of the years digits
2 = straight line
3 = 125% declining balance
4 = 150% declining balance
5 = 200% declining balance
6 = reverse sum of years digits
9 = equity modification
"-" = remove equity
"+" = add equity

= Bonus Basis Type

1 = fixed income - base amount
2 = gross rent - base amount
3 = effective gross rent - base amount
4 = fixed income - fixed expense - base amount
5 = net income - base amount
6 = cash throw - base amount * bonus interest rate
7 = market value - base amount * bonus interest rate
8 = B/4 net worth - base amount * bonus interest rate
9 = after tax net worth - base amount * bonus interest rate

Report Field Identifiers

Field #	Report Title	Field #	Report Title
1.	Summary of Income & Expense	6.	After Tax Ratios
2.	Component Summary	7.	Modified Internal Rate of Return
3.	Cash Flow	8.	Mortgage Amortization
4.	Market Value	9.	Depreciation Schedules
5.	Before Tax Ratios	10.	Partnership Report

* = Position #1 of Card 400

5 = Auto 1, 2, 3, 4, 5, 6, 7, 10

9 = Auto All

3 = Select Specific Line #'s (10 maximum)

PRINT YEARS (Enter any year number 1-25, in any order)

403 ____ , ____ , ____ , ____ , ____ , ____ , ____ , ____ , ____ , ____

99 = first entry line 403 means 10 year wide carriage output option.

```
1,CHEMICAL BANK SEMINAR,CASE PROBLEM - GEN.
10,1979,0,1,1.0,5,60242
40,220893,*
60,8339,*
70,24097,*
80,19457,*
100,.12,.50,.07
101,0,.015,6
102,.14,1,.06,0
200,1,LAND
201,1,332400,.0,0
202,1,1,0,0
200,2,IMPROVEMENTS
201,2,1431968,.90,2
202,2,1,33,0
300,1,FIRST MORTGAGE
301,1,.75,.09625,0,27
302,1,12,1,27,0
103,3000,.0,.07,0
400,5
403,1,2,3,5
999,99
```

R E P O R T S E C T I O N N U M B E R 1

* GROSS RENT	$ 220893.	* RATE OF GROWTH OF GROSS RENT	0.0000
* EXPENSES	$ 19457.	* RATE OF GROWTH OF EXPENSES	0.0000
* R E TAXES	$ 24097.	* RATE OF GROWTH OF R E TAXES	0.0000
* INCOME TAX RATE	0.5000	PROJECT VALUE GROWTH OF	6.0000
* VACANCY RATE	0.0378	WORKING CAPITAL LOAN RATE	0.1400
EQUITY DISCOUNT	0.1200	EXTRAORDINARY EXPENSES	$ 0.
RESALE COST	0.0600	REINVESTMENT RATE	0.0700
WKG CAPITAL RS	$ 0.	CAPITAL RESER INTEREST RATE	0.0700
INITIAL COST	$ 1764368.	INITIAL EQUITY REQUIRED	$ 441092.

ALL '*' VALUES ARE AVERAGE AMOUNTS FOR HOLDING PERIOD. OF 5 YRS.

R E P O R T S E C T I O N N U M B E R 2

C O M P O N E N T S U M M A R Y

TITLE	PCT. DEPR	BEGIN USE	USEFUL LIFE	DEPR METHOD	COST	SCH
LAND	0.00	1	0.	0	$ 332400.	0
IMPROVEMENTS	0.90	1	33.	2	$ 1431968.	0

M O R T G A G E S U M M A R Y

TITLE	INTR RATE	BEGIN YR.	END YR.	TERM	ORIG BALC	PCT VALUE
FIRST MORTGAGE	0.0962	1	27	27	$ 1323276.	0.750

P R O F O R M A

INVESTMENT ANALYSIS OF

CHEMICAL BANK SEMINA

FOR

CASE PROBLEM - GEN.

R E P O R T S E C T I O N N U M B E R 3

CASH FLOW ANALYSIS

		1979	1980	1981	1983
1	GROSS RENT	220893.	220893.	220893.	220893.
2	LESS VACANCY	8339.	8339.	8339.	8339.
3	LESS REAL ESTATE TAXES	24097.	24097.	24097.	24097.
4	LESS EXPENSES	19457.	19457.	19457.	19457.
5	NET INCOME	169000.	169000.	169000.	169000.
6	LESS DEPRECIATION	39054.	39054.	39054.	39054.
7	LESS INTEREST	126896.	125808.	124610.	121841.
8	TAXABLE INCOME	3050.	4138.	5336.	8105.
9	PLUS DEPRECIATION	39054.	39054.	39054.	39054.
10	LESS PRINCIPAL PAYMENTS	10817.	11905.	13103.	15872.
11	CASH THROW-OFF	31287.	31287.	31287.	31287.
12	LESS TAXES	1525.	2069.	2668.	4053.
13	LESS RESERVES AT 3000.000	3000.	3000.	3000.	3000.
14	CASH FROM OPERATIONS	26762.	26218.	25619.	24234.
15	WORKING CAPITAL LOAN(CUM B)	0.	0.	0.	0.
16	DISTRIBUTABLE CASH AFR TAX	26762.	26218.	25619.	24234.
17	TAX SAVING ON OTHER INCOME	0.	0.	0.	0.
18	SPENDABLE CASH AFTER TAXES	26762.	26218.	25619.	24234.

REPORT SECTION NUMBER 4 PAGE 1

CASH FLOW ANALYSIS

		1979	1980	1981	1983
	MARKET VALUE				
19	BY METHOD - 6 - AT 0.0150	1790834.	1817696.	1844962.	1900725.
20	LESS RESALE COST	107450.	109062.	110698.	114044.
21	LESS LOAN BALANCES	1312459.	1300554.	1287452.	1257159.
22	PLUS CUM. CASH RESERVES	3000.	6210.	9645.	17252.
23	B/4 TAX NET WORTH	373924.	414290.	456457.	546775.
24	CAPITAL GAIN (IF SOLD)	-41931.	22374.	87057.	217582.
25	CAPITAL GAINS TAX	-8386.	4475.	17411.	43516.
26	TAX PREFERENCE TAX	0.	0.	0.	0.
27	INCOME TAX ON EXCESS DEP	0.	0.	0.	0.
28	TOTAL TAX ON SALE	-4193.	4475.	17411.	43516.
29	AFTER TAX NET WORTH	378117.	409815.	439046.	503259.

REPORT SECTION NUMBER 5 PAGE 1

YEAR OF ANALYSIS

		1979	1980	1981	1983
	BEFORE TAX RATIO ANALYSIS				
30	RETURN ON NET WORTH B/4 TAX	-0.0813	0.1916	0.1773	0.1548
31	CHANGE IN NET WORTH B/4 TAX	-67168.	40366.	42167.	46208.
32	CASH RTN ON ORIG CASH EQUIY	0.0709	0.0709	0.0709	0.0709
33	PERCENT ORIG EQUITY PAYBACK	0.0607	0.1201	0.1782	0.2897
34	PRESENT VALUE OF PROJECT	1685072.	1706422.	1723319.	1746313.

REPORT SECTION NUMBER 6 PAGE 1

YEAR OF ANALYSIS	1979	1980	1981	1983
AFTER TAX RATIO ANALYSIS				
35 RETURN ON NEW WORTH AFT TAX	-0.0821	0.1532	0.1338	0.1220
36 CHANGE IN NET WORTH AFT TAX	-62975.	31698.	29230.	33117.
37 CASH RTN ON ORIG CASH EQUIY	0.0607	0.0594	0.0581	0.0549
38 PERCENT ORIG EQUITY PAYBACK	0.0607	0.1201	0.1782	0.2897
39 PRESENT VALUE OF PROJECT	1684775.	1694773.	1698810.	1701483.
40 NET INCOME-MARKET VALUE RTO	0.0944	0.0930	0.0916	0.0889
41 LENDER BONUS INTEREST RATE	0.0000	0.0000	0.0000	0.0000
42 DEFAULT RATIO	0.8206	0.8206	0.8206	0.8206

REPORT SECTION NUMBER 7 PAGE 1

YEAR OF ANALYSIS	1979	1980	1981	1983
MODIFIED INTERNAL RATE OF RETURN ANALYSIS				
RETURN ANALYSIS WITHOUT SALE				
41 CUM. AFT TAX SPENDABLE CASH	26762.	54853.	84312.	147470.
44 MOD. I.R.R. ON ORIG EQUITY	-0.9393	-0.6474	-0.4240	-0.1968
45 MOD. I.R.R. ON CUM. EQUITY	-0.9393	-0.6474	-0.4240	-0.1968
RETURN ANALYSIS WITH SALE				
46 CUM. CASH LESS ORIG EQUITY	-40406.	23576.	82265.	209637.
47 CUM. CASH LESS CUM. EQUITY	-40406.	23576.	82265.	209637.
48 MOD I.R.R. ON ORIG EQUITY	-0.0916	0.0264	0.0587	0.0809
49 MOD I.R.R. ON CUM. EQUITY	-0.0916	0.0264	0.0587	0.0809

```
1,CHEMICAL BANK SEMINAR,CASE PROBLEM - GEN.
10,1979,0,1,1.0,5,60242
40,220893,*
60,8339,*
70,24097,*
80,19457,*
100,.12,.50,.07
101,0,.000,6
102,.14,1,.06,0
200,1,LAND
201,1,332400,.0,0
202,1,1,0,0
200,2,IMPROVEMENTS
201,2,1367600,.90,2
202,2,1,33,0
300,1,FIRST MORTGAGE
301,1,.75,.09625,0,27
302,1,12,1,27,0
103,3000,.0,.07,0
400,5
403,1,2,3,5
999,99

Ready
```

R E P O R T S E C T I O N N U M B E R 1

* GROSS RENT	$ 220893.	* RATE OF GROWTH OF GROSS RENT	0.0000
* EXPENSES	$ 19457.	* RATE OF GROWTH OF EXPENSES	0.0000
* R E TAXES	$ 24097.	* RATE OF GROWTH OF R E TAXES	0.0000
* INCOME TAX RATE	0.5000	PROJECT VALUE GROWTH OF	6.0000
* VACANCY RATE	0.0378	WORKING CAPITAL LOAN RATE	0.1400
EQUITY DISCOUNT	0.1200	EXTRAORDINARY EXPENSES	$ 0.
RESALE COST	0.0600	REINVESTMENT RATE	0.0700
WKG CAPITAL RS	$ 0.	CAPITAL RESER INTEREST RATE	0.0700
INITIAL COST	$ 1700000.	INITIAL EQUITY REQUIRED	$ 425000.

ALL '*' VALUES ARE AVERAGE AMOUNTS FOR HOLDING PERIOD. OF 5 YRS.

R E P O R T S E C T I O N N U M B E R 2

C O M P O N E N T S U M M A R Y

TITLE	PCT. DEPR	BEGIN USE	USEFUL LIFE	DEPR METHOD	COST	SCH
LAND	0.00	1	0.	0	$ 332400.	0
IMPROVEMENTS	0.90	1	33.	2	$ 1367600.	0

M O R T G A G E S U M M A R Y

TITLE	INTR RATE	BEGIN YR.	END YR.	TERM	ORIG BALC	PCT VALUE
FIRST MORTGAGE	0.0962	1	27	27	$ 1275000.	0.750

P R O F O R M A

INVESTMENT ANALYSIS OF

CHEMICAL BANK SEMINA

FOR

CASE PROBLEM - GEN.

R E P O R T S E C T I O N N U M B E R 3 PAGE 1

CASH FLOW ANALYSIS

		1979	1980	1981	1983
1	GROSS RENT	220893.	220893.	220893.	220893.
2	LESS VACANCY	8339.	8339.	8339.	8339.
3	LESS REAL ESTATE TAXES	24097.	24097.	24097.	24097.
4	LESS EXPENSES	19457.	19457.	19457.	19457.
5	NET INCOME	169000.	169000.	169000.	169000.
6	LESS DEPRECIATION	37298.	37298.	37298.	37298.
7	LESS INTEREST	122267.	121218.	120064.	117396.
8	TAXABLE INCOME	9435.	10483.	11638.	14306.
9	PLUS DEPRECIATION	37298.	37298.	37298.	37298.
10	LESS PRINCIPAL PAYMENTS	10422.	11471.	12625.	15293.
11	CASH THROW-OFF	36311.	36311.	36311.	36311.
12	LESS TAXES	4717.	5242.	5819.	7153.
13	LESS RESERVES AT 3000.000	3000.	3000.	3000.	3000.
14	CASH FROM OPERATIONS	28594.	28069.	27492.	26158.
15	WORKING CAPITAL LOAN(CUM B)	0.	0.	0.	0.
16	DISTRIBUTABLE CASH AFR TAX	28594.	28069.	27492.	26158.
17	TAX SAVING ON OTHER INCOME	0.	0.	0.	0.
18	SPENDABLE CASH AFTER TAXES	28594.	28069.	27492.	26158.

CASH FLOW ANALYSIS

		1979	1980	1981	1983
	MARKET VALUE				
19	BY METHOD - 6 - AT 0.0000	1700000.	1700000.	1700000.	1700000.
20	LESS RESALE COST	102000.	102000.	102000.	102000.
21	LESS LOAN BALANCES	1264578.	1253107.	1240483.	1211295.
22	PLUS CUM. CASH RESERVES	3000.	6210.	9645.	17252.
23	B/4 TAX NET WORTH	336422.	351103.	367162.	403957.
24	CAPITAL GAIN (IF SOLD)	-64702.	-27404.	9895.	84491.
25	CAPITAL GAINS TAX	-12940.	-5481.	1979.	16898.
26	TAX PREFERENCE TAX	0.	0.	0.	0.
27	INCOME TAX ON EXCESS DEP	0.	0.	0.	0.
28	TOTAL TAX ON SALE	-6470.	-2740.	1979.	16898.
29	AFTER TAX NET WORTH	342892.	353843.	365183.	387059.

YEAR OF ANALYSIS

		1979	1980	1981	1983
	BEFORE TAX RATIO ANALYSIS				
30	RETURN ON NET WORTH B/4 TAX	-0.1230	0.1516	0.1492	0.1444
31	CHANGE IN NET WORTH B/4 TAX	-88578.	14681.	16059.	19225.
32	CASH RTN ON ORIG CASH EQUIY	0.0854	0.0854	0.0854	0.0854
33	PERCENT ORIG EQUITY PAYBACK	0.0673	0.1333	0.1980	0.3228
34	PRESENT VALUE OF PROJECT	1607797.	1616264.	1623552.	1635109.

R E P O R T S E C T I O N N U M B E R 6

PAGE 1

YEAR OF ANALYSIS	1979	1980	1981	1983
AFTER TAX RATIO ANALYSIS				
35 RETURN ON NEW WORTH AFT TAX	-0.1259	0.1138	0.1097	0.1011
36 CHANGE IN NET WORTH AFT TAX	-82108.	10951.	11340.	11766.
37 CASH RTN ON ORIG CASH EQUIY	0.0673	0.0660	0.0647	0.0615
38 PERCENT ORIG EQUITY PAYBACK	0.0673	0.1333	0.1980	0.3228
39 PRESENT VALUE OF PROJECT	1606684.	1604988.	1602405.	1594014.
40 NET INCOME-MARKET VALUE RTO	0.0994	0.0994	0.0994	0.0994
41 LENDER BONUS INTEREST RATE	0.0000	0.0000	0.0000	0.0000
42 DEFAULT RATIO	0.7979	0.7979	0.7979	0.7979

R E P O R T S E C T I O N N U M B E R 7

PAGE 1

YEAR OF ANALYSIS	1979	1980	1981	1983
MODIFIED INTERNAL RATE OF RETURN ANALYSIS				
RETURN ANALYSIS WITHOUT SALE				
41 CUM. AFT TAX SPENDABLE CASH	28594.	58664.	90263.	158238.
44 MOD. I.R.R. ON ORIG EQUITY	-0.9327	-0.6285	-0.4034	-0.1793
45 MOD. I.R.R. ON CUM. EQUITY	-0.9327	-0.6285	-0.4034	-0.1793
RETURN ANALYSIS WITH SALE				
46 CUM. CASH LESS ORIG EQUITY	-59984.	-15233.	30446.	120297.
47 CUM. CASH LESS CUM. EQUITY	-59984.	-15233.	30446.	120297.
48 MOD I.R.R. ON ORIG EQUITY	-0.1411	-0.0181	0.0233	0.0511
49 MOD I.R.R. ON CUM. EQUITY	-0.1411	-0.0181	0.0233	0.0511

Summary Table - Project As Whole

	1	2
Cost	1,764,368	1,700,000
Equity	441,092	425,000
Mortgage	1,323,276	1,275,000
Default - 1	.8206	.7979
Default - 5	.8206	.7979
NOI / MKT - 1	.0944	.0944
NOI / MKT - 5	.0889	.0994
Before Tax C/C - 1	.0709	.0854
Before Tax C/C - 5	.0709	.0854
After Tax C/C - 1	.0607	.0673
After Tax C/C - 5	.0549	.0615
Payback - 1	.0607	.0673
Payback - 5	.2897	.3228
M.I.R.R. - 1	-.0916	-.1411
M.I.R.R. - 5	.0809	.0511

Observations Relative To Runs 1 and 2

Run #1

Loan 75% of Replacement Cost New, i.e. 1,764,373 and include an annual market appreciation of 1-1/2 compounding.

Run #2

Loan 75% of Appraised Value, i.e. 1,700,000 and do not include an annual market appreciation.

Results Common To Both:

1. Default Ratio is below required level.

   This <u>may</u> indicate a sound project with reduced risk <u>or</u> an over optimistic estimate of income and expenses.

2. N.O.I./Market Ratio in #1 is going down.

   This indicates that the Market Value relative to the N.O.I. is increasing, meaning:

   a. An accumulation of value for a refinancing option.

   b. A possible index for estimating lease renewal options.

   c. Market demands are in fact changing over time.

   d. The application of the relationship between income and value is inconsistent.

   e. All the above and more.

3. Before and After Tax Cash-On-Cash rates are below what the appraisal indicates would be acceptable for this type of project.

4. Equity Payback is very slow.

5. The Modified Internal Rate of Return is very low.

```
 1=1,CHEMICAL BANK SEMINAR,CASE PROBLEM - CSH.
 2=10,1979,0,1,1.0,5,60242
 3=30,.83,1000,2,.05,.09695,.08
 4=40,220893,*
 5=60,8339,*
 6=70,24097,*
 7=80,19457,*
 8=100,.12,.50,.07
 9=101,0,.015,6
10=102,.14,1,.06,0
11=200,1,LAND
12=201,1,332400,.0,0
13=202,1,1,0,0
14=200,2,IMPROVEMENTS
15=201,2,1431968,.90,2
16=202,2,1,33,0
17=200,3,ENTREPRENEURIAL SKILL
18=201,3,-150000,.0,0
19=202,3,1,0,0
20=300,1,FIRST MORTGAGE
21=301,1,1275000,.09625,0,27
22=302,1,12,1,27,0
23=103,3000,.0,.07,0
24=400,5
25=403,1,2,3,5
26=999,99
```

REPORT SECTION NUMBER 1

* GROSS RENT	$ 220893.	* RATE OF GROWTH OF GROSS RENT	0.0000
* EXPENSES	$ 19457.	* RATE OF GROWTH OF EXPENSES	0.0000
* R E TAXES	$ 24097.	* RATE OF GROWTH OF R E TAXES	0.0000
* INCOME TAX RATE	0.5000	PROJECT VALUE GROWTH OF	6.0000
* VACANCY RATE	0.0378	WORKING CAPITAL LOAN RATE	0.1400
EQUITY DISCOUNT	0.1200	EXTRAORDINARY EXPENSES	$ 0.
RESALE COST	0.0600	REINVESTMENT RATE	0.0700
WKG CAPITAL RS	$ 0.	CAPITAL RESER INTEREST RATE	0.0700
INITIAL COST	$ 1614368.	INITIAL EQUITY REQUIRED	$ 339368.

ALL '*' VALUES ARE AVERAGE AMOUNTS FOR HOLDING PERIOD. OF 5 YRS.

REPORT SECTION NUMBER 2

COMPONENT SUMMARY

TITLE	PCT. DEPR	BEGIN USE	USEFUL LIFE	DEPR METHOD	COST	SCH
LAND	0.00	1	0.	0	$ 332400.	0
IMPROVEMENTS	0.90	1	33.	2	$ 1431968.	0
ENTREPRENEURIAL SKIL	0.00	1	0.	0	$ -150000.	0

MORTGAGE SUMMARY

TITLE	INTR RATE	BEGIN YR.	END YR.	TERM	ORIG BALC	PCT VALUE
FIRST MORTGAGE	0.0962	1	27	27	$ 1275000.	0.790

P R O F O R M A

INVESTMENT ANALYSIS OF

CHEMICAL BANK SEMINA

FOR

CASE PROBLEM - CSH.

R E P O R T S E C T I O N N U M B E R 3

CASH FLOW ANALYSIS

		1979	1980	1981	1983
1	GROSS RENT	220893.	220893.	220893.	220893.
2	LESS VACANCY	8339.	8339.	8339.	8339.
3	LESS REAL ESTATE TAXES	24097.	24097.	24097.	24097.
4	LESS EXPENSES	19457.	19457.	19457.	19457.
5	NET INCOME	169000.	169000.	169000.	169000.
6	LESS DEPRECIATION	39054.	39054.	39054.	39054.
7	LESS INTEREST	122267.	121218.	120064.	117396.
8	TAXABLE INCOME	7679.	8728.	9882.	12550.
9	PLUS DEPRECIATION	39054.	39054.	39054.	39054.
10	LESS PRINCIPAL PAYMENTS	10422.	11471.	12625.	15293.
11	CASH THROW-OFF	36311.	36311.	36311.	36311.
12	LESS TAXES	3840.	4364.	4941.	6275.
13	LESS RESERVES AT 3000.000	3000.	3000.	3000.	3000.
14	CASH FROM OPERATIONS	29471.	28947.	28370.	27036.
15	WORKING CAPITAL LOAN(CUM B)	0.	0.	0.	0.
16	DISTRIBUTABLE CASH AFR TAX	29471.	28947.	28370.	27036.
17	TAX SAVING ON OTHER INCOME	0.	0.	0.	0.
18	SPENDABLE CASH AFTER TAXES	29471.	28947.	28370.	27036.

REPORT SECTION NUMBER 4

CASH FLOW ANALYSIS

		1979	1980	1981	1983
	MARKET VALUE				
19	BY METHOD - 6 - AT 0.0150	1638584.	1663162.	1688110.	1739133.
20	LESS RESALE COST	98315.	99790.	101287.	104348.
21	LESS LOAN BALANCES	1264578.	1253107.	1240483.	1211295.
22	PLUS CUM. CASH RESERVES	3000.	6210.	9645.	17252.
23	B/4 TAX NET WORTH	278691.	316475.	355985.	440742.
24	CAPITAL GAIN (IF SOLD)	-35046.	27112.	89616.	215685.
25	CAPITAL GAINS TAX	-7009.	5422.	17923.	43137.
26	TAX PREFERENCE TAX	0.	0.	0.	0.
27	INCOME TAX ON EXCESS DEP	0.	0.	0.	0.
28	TOTAL TAX ON SALE	-3505.	5422.	17923.	43137.
29	AFTER TAX NET WORTH	282195.	311053.	338062.	397605.

REPORT SECTION NUMBER 5

YEAR OF ANALYSIS

		1979	1980	1981	1983
	BEFORE TAX RATIO ANALYSIS				
30	RETURN ON NET WORTH B/4 TAX	-0.0718	0.2659	0.2396	0.2006
31	CHANGE IN NET WORTH B/4 TAX	-60678.	37785.	39510.	43385.
32	CASH RTN ON ORIG CASH EQUIY	0.1070	0.1070	0.1070	0.1070
33	PERCENT ORIG EQUITY PAYBACK	0.0868	0.1721	0.2557	0.4171
34	PRESENT VALUE OF PROJECT	1556251.	1588660.	1615596.	1655982.

REPORT SECTION NUMBER 6 PAGE 1

YEAR OF ANALYSIS	1979	1980	1981	1983
AFTER TAX RATIO ANALYSIS				
35 RETURN ON NEW WORTH AFT TAX	-0.0816	0.2048	0.1780	0.1575
36 CHANGE IN NET WORTH AFT TAX	-57173.	28858.	27009.	30742.
37 CASH RTN ON ORIG CASH EQUIY	0.0868	0.0853	0.0836	0.0797
38 PERCENT ORIG EQUITY PAYBACK	0.0868	0.1721	0.2557	0.4171
39 PRESENT VALUE OF PROJECT	1553274.	1572359.	1585209.	1603162.
40 NET INCOME-MARKET VALUE RTO	0.1031	0.1016	0.1001	0.0972
41 LENDER BONUS INTEREST RATE	0.0000	0.0000	0.0000	0.0000
42 DEFAULT RATIO	0.7979	0.7979	0.7979	0.7979

REPORT SECTION NUMBER 7 PAGE 1

YEAR OF ANALYSIS	1979	1980	1981	1983
MODIFIED INTERNAL RATE OF RETURN ANALYSIS				
RETURN ANALYSIS WITHOUT SALE				
41 CUM. AFT TAX SPENDABLE CASH	29471.	60481.	93085.	163285.
44 MOD. I.R.R. ON ORIG EQUITY	-0.9132	-0.5778	-0.3503	-0.1361
45 MOD. I.R.R. ON CUM. EQUITY	-0.9132	-0.5778	-0.3503	-0.1361
RETURN ANALYSIS WITH SALE				
46 CUM. CASH LESS ORIG EQUITY	-31206.	32166.	91779.	221522.
47 CUM. CASH LESS CUM. EQUITY	-31206.	32166.	91779.	221522.
48 MOD I.R.R. ON ORIG EQUITY	-0.0920	0.0463	0.0831	0.1057
49 MOD I.R.R. ON CUM. EQUITY	-0.0920	0.0463	0.0831	0.1057

R E P O R T S E C T I O N

SENSITIVITY ANALYSIS

ANALYSIS YEAR IS 2 = 1980

DEFAULT RATE - NEEDED -	0.8300	0.8300	0.8300	0.8300
DEFAULT RATE - ACTUAL -	0.7979	0.7979	0.7979	0.7979
DIFFER -	0.0321	0.0321	0.0321	0.0321

TO CHANGE THE DEFAULT RATE .01
CHANGE ANY ONE OF THE FOLLOWING

CASH OUTLAYS		1979	1980	1981	1982
REAL ESTATE TAXES	BY	0.0917	0.0917	0.0917	0.0917
TOTAL EXPENSES	BY	0.1135	0.1135	0.1135	0.1135
FIXED EXPENSES	BY	0.1135	0.1135	0.1135	0.1135
VARIABLE EXPENSES	BY	0.0000	0.0000	0.0000	0.0000
TOTAL INTEREST PMTS.	BY	0.0181	0.0182	0.0184	0.0186
TOTAL PRINCIPAL PMTS.	BY	0.2119	0.1926	0.1750	0.1590
WORKING CAPITAL LOAN	BY	0.0000	0.0000	0.0000	0.0000
GROSS INCOME	BY	-0.0080	-0.0080	-0.0080	-0.0080
FIXED INCOME	BY	-0.0080	-0.0080	-0.0080	-0.0080
VARIABLE INCOME	BY	0.0000	0.0000	0.0000	0.0000

COMPONENTS		1979	1980	1981	1982
INITIAL INVESTMENT	BY	0.0917	0.0917	0.0917	0.0917
LAND	BY	0.4452	0.4452	0.4452	0.4452
IMPROVEMENTS	BY	0.1033	0.1033	0.1033	0.1033
ENTREPRENEURIAL SKIL	BY	-0.9866	-0.9866	-0.9866	-0.9866

MORTGAGES		1979	1980	1981	1982
FIRST MORTGAGE	BY	0.0166	0.0166	0.0166	0.0166

R E P O R T S E C T I O N

SENSITIVITY ANALYSIS

ANALYSIS YEAR IS 2 = 1980

TO CHANGE CASH RETURN BEFORE TAXES BY 1000.
CHANGE ANY ONE OF THE FOLLOWING

CASH OUTLAYS		1979	1980	1981	1982
REAL ESTATE TAXES	BY	0.0415	0.0415	0.0415	0.0415
TOTAL EXPENSES	BY	0.0514	0.0514	0.0514	0.0514
FIXED EXPENSES	BY	0.0514	0.0514	0.0514	0.0514
VARIABLE EXPENSES	BY	0.0000	0.0000	0.0000	0.0000
TOTAL INTEREST PMTS.	BY	0.0082	0.0082	0.0083	0.0084
TOTAL PRINCIPAL PMTS.	BY	0.0960	0.0872	0.0792	0.0720
WORKING CAPITAL LOAN	BY	0.0000	0.0000	0.0000	0.0000
GROSS INCOME	BY	0.0045	0.0045	0.0045	0.0045
FIXED INCOME	BY	0.0045	0.0045	0.0045	0.0045
VARIABLE INCOME	BY	0.0000	0.0000	0.0000	0.0000

COMPONENTS		1979	1980	1981	1982
INITIAL INVESTMENT	BY	0.0415	0.0415	0.0415	0.0415
LAND	BY	0.2015	0.2015	0.2015	0.2015
IMPROVEMENTS	BY	0.0468	0.0468	0.0468	0.0468
ENTREPRENEURIAL SKIL	BY	-0.4466	-0.4466	-0.4466	-0.4466

MORTGAGES		1979	1980	1981	1982
FIRST MORTGAGE	BY	0.0075	0.0075	0.0075	0.0075

R E P O R T S E C T I O N

F R O N T D O O R A N A L Y S I S

A S S U M P T I O N S

ANALYSIS YEAR IS 2 = 1980

C A S H F L O W

GROSS INCOME	1.000	EXPENSES	0.088
FIXED INCOME	1.000	FIXED EXPENSES	0.088
VARIABLE INCOME	0.000	VARIABLE EXPENSES	0.000
VACANCY	0.038	REAL ESTATE TAXES	0.109
DEBT REPAYMENT	0.601	EQUITY PAYMENT	0.164

DEBT STRUCTURE

TOTAL DEBT IN EFFECT	0.601
FIRST MORTGAGE	0.601

EQUITY CONTRIBUTION

TOTAL EQUITY	0.164		
COST LESS DEBT	0.164	AT ANNUAL RATE OF	0.097
WKG CAPITAL RS	0.000	AT ANNUAL RATE OF	0.080

F R O N T D O O R A N A L Y S I S

C A S H F L O W

P E R C E N T A G E B A S I S

ANALYSIS YEAR IS 2 = 1980

	TEST AT 1.00	TEST AT 1.05	TEST AT 0.95
TYPE 0 VALUE ESTIMATE =	1614368.	1695086.	1533650.

EQUITY RETURN BASIS
REQUIRED CASH FLOW

	YR.	#	YR.	#	YR.	#
GROSS RENT	216437.	3.59	227259.	3.77	205615.	3.41
LESS VACANCY	8171.	0.14	8579.	0.14	7762.	0.13
LESS R.E. TAXES	23611.	0.39	24791.	0.41	22430.	0.37
LESS EXPENSES	19064.	0.32	20018.	0.33	18111.	0.30
NET INCOME	165591.	2.75	173870.	2.89	157311.	2.61
DEBT SERVICE	132689.	2.20	139323.	2.31	126055.	2.09
CASH THROW-OFF	32902.	0.55	34547.	0.57	31257.	0.52

DEFAULT = 0.81023

ZERO EQUITY RETURN BASIS
REQUIRED CASH FLOW

	YR.	#	YR.	#	YR.	#
GROSS RENT	173432.	2.88	182104.	3.02	164761.	2.73
LESS VACANCY	6547.	0.11	6875.	0.11	6220.	0.10
LESS R.E. TAXES	18920.	0.31	19866.	0.33	17974.	0.30
LESS EXPENSES	15277.	0.25	16040.	0.27	14513.	0.24
NET INCOME	132689.	2.20	139323.	2.31	126055.	2.09
DEBT SERVICE	132689.	2.20	139323.	2.31	126055.	2.09
CASH THROW-OFF	0.	0.00	0.	0.00	0.	0.00

DEFAULT = 0.96225

RISK ADJUSTED BASIS WITH DEFAULT AT 0.830 AND ALLOCATING -2709.55 DOLLARS
REQUIRED CASH FLOW

	YR.	#	YR.	#	YR.	#
GROSS RENT	214719.	3.56	225455.	3.74	203983.	3.39
LESS VACANCY	8171.	0.14	8579.	0.14	7762.	0.13
LESS R.E. TAXES	25189.	0.42	26448.	0.44	23929.	0.40
LESS EXPENSES	20339.	0.34	21356.	0.35	19322.	0.32
NET INCOME	161020.	2.67	169071.	2.81	152969.	2.54
DEBT SERVICE	132689.	2.20	139323.	2.31	126055.	2.09
CASH THROW-OFF	28331.	0.47	29748.	0.49	26915.	0.45

DEFAULT = 0.83000

F R O N T D O O R A N A L Y S I S

C A S H F L O W

C A S H B A S I S

ANALYSIS YEAR IS 2 = 1980

	TEST AT 1.00	TEST AT 1.05	TEST AT 0.00
TYPE 0 VALUE ESTIMATE =	1614368.	1695086.	1533650.

EQUITY RETURN BASIS
REQUIRED CASH FLOW

	YR.	#	YR.	#	YR.	#
GROSS RENT	217484.	3.61	225763.	3.75	209204.	3.47
LESS VACANCY	8339.	0.14	8339.	0.14	8339.	0.14
LESS R.E. TAXES	24097.	0.40	24097.	0.40	24097.	0.40
LESS EXPENSES	19457.	0.32	19457.	0.32	19457.	0.32
NET INCOME	165591.	2.75	173870.	2.89	157311.	2.61
DEBT SERVICE	132689.	2.20	139323.	2.31	126055.	2.09
CASH THROW-OFF	32902.	0.55	34547.	0.57	31257.	0.52

DEFAULT = 0.81037

ZERO EQUITY RETURN BASIS
REQUIRED CASH FLOW

	YR.	#	YR.	#	YR.	#
GROSS RENT	184582.	3.06	191216.	3.17	177948.	2.95
LESS VACANCY	8339.	0.14	8339.	0.14	8339.	0.14
LESS R.E. TAXES	24097.	0.40	24097.	0.40	24097.	0.40
LESS EXPENSES	19457.	0.32	19457.	0.32	19457.	0.32
NET INCOME	132689.	2.20	139323.	2.31	126055.	2.09
DEBT SERVICE	132689.	2.20	139323.	2.31	126055.	2.09
CASH THROW-OFF	0.	0.00	0.	0.00	0.	0.00

DEFAULT = 0.95482

RISK ADJUSTED BASIS WITH DEFAULT AT 0.830 AND ALLOCATING -2687.28 DOLLARS
REQUIRED CASH FLOW

	YR.	#	YR.	#	YR.	#
GROSS RENT	215769.	3.58	223954.	3.72	207585.	3.45
LESS VACANCY	8339.	0.14	8339.	0.14	8339.	0.14
LESS R.E. TAXES	25671.	0.43	25759.	0.43	25584.	0.42
LESS EXPENSES	20728.	0.34	20799.	0.35	20657.	0.34
NET INCOME	161031.	2.67	169057.	2.81	153005.	2.54
DEBT SERVICE	132689.	2.20	139323.	2.31	126055.	2.09
CASH THROW-OFF	28342.	0.47	29733.	0.49	26951.	0.45

DEFAULT = 0.83000

BACK DOOR ANALYSIS

COMPONENTS

PERCENTAGE BASIS

ANALYSIS YEAR IS 2 = 1980

	TEST AT 1.00	TEST AT 1.05	TEST AT 0.95
GROSS RENT PROJECTED	220893.	231938.	209848.
REVENUE UNIT INCOME	3.667	3.850	3.483

JUSTIFIED COMPONENTS

TYPE 0 VALUE ESTIMATE =	1647605.	1729986.	1565225.
VALUE DIFFERENCE =	33237.	115618.	-49143.

LAND	339244.	0.021	356206.	0.072	322281.	-0.030
IMPROVEMENTS	1461450.	0.021	1534523.	0.072	1388378.	-0.030
ENTREPRENEURIAL	-153088.	0.021	-160743.	0.072	-145434.	-0.030
FIRST MORTGAGE	1301250.	0.021	1366313.	0.072	1236188.	-0.030
EQTY CONTRIBUTION	346355.	0.021	363673.	0.072	329037.	-0.030

Improvement Allocation	Total	A	B	C
Building Cost	1,249,988	878,849	297,236	73,903
Intangibles	81,240	58,726	18,031	4,483
Land Under Building - Area	60,242	43,050	14,560	2,632
Land Under Building - Value*1.30	78,312	55,965	18,928	3,422
Parking Land - Area	180,000	113,238	48,438	18,324
Parking Land - Value*1.30	234,000	147,209	62,969	23,821
Open Space - Area	15,456	9,723	4,159	1,573
Open Space - Value*1.30	20,093	12,640	5,407	2,045
Parking Surface - Value*.50	90,000	56,619	24,219	9,162
Parking Lighting	10,740	6,756	2,890	1,093
Total	1,764,373	1,216,764	429,680	117,929
Financial Allocation	.7226			
Mortgage Amount	1,275,000	879,278	310,502	85,220
Income				
Gross Income	220,893	133,365	74,368	13,160
Vacancy	8,339	3,054	5,114	171
Real Estate Taxes	24,097	16,619	5,868	1,610
Operating Expenses	19,457	13,419	4,738	1,300
Net Income	169,000	100,273	58,648	10,079
Reserve Contribution	3,000	2,070	730	200

```
ENTER THE NUMBER OF LINES TO BE PRINTED -- MAX. IS 10
SEPERATED BY COMMAS -- MAX. IS TEN VALUES

7
     ENTER LINE NUMBERS

32,37,38,40,42,46,48

     CASH FLOW ANALYSIS
     ==================                        1979      1980      1981      1983
     32  ORIG EQUITY CASH RTNB/4 TAX         0.0260    0.0260    0.0260    0.0260
     37  ORIG EQUITY CASH RTNAFR TAX         0.0367    0.0356    0.0344    0.0317  A
     38  ORIG EQUITY PAYBACK AFR TAX         0.0367    0.0722    0.1066    0.1714
     40  NET INCOME-MARKET VALUE RTO         0.0812    0.0800    0.0788    0.0765
     42  DEFAULT RATIO                       0.9113    0.9113    0.9113    0.9113
     46  CUM. CASH LESS ORIG EQUITY         -34221.     2961.    36097.   107719.
     48  MOD. I.R.R. ON ORIG EQUITY         -0.1014    0.0044    0.0344    0.0570

     CASH FLOW ANALYSIS
     ==================                        1979      1980      1981      1983
     32  ORIG EQUITY CASH RTNB/4 TAX         0.2210    0.2210    0.2210    0.2210
     37  ORIG EQUITY CASH RTNAFR TAX         0.1982    0.1971    0.1960    0.1932  B
     38  ORIG EQUITY PAYBACK AFR TAX         0.1982    0.3953    0.5913    0.9792
     40  NET INCOME-MARKET VALUE RTO         0.1345    0.1325    0.1305    0.1267
     42  DEFAULT RATIO                       0.5771    0.5771    0.5771    0.5771
     46  CUM. CASH LESS ORIG EQUITY           -772.    23063.    47889.   104168.
     48  MOD. I.R.R. ON ORIG EQUITY         -0.0065    0.0925    0.1192    0.1338

     CASH FLOW ANALYSIS
     ==================                        1979      1980      1981      1983
     32  ORIG EQUITY CASH RTNB/4 TAX         0.0370    0.0370    0.0370    0.0370
     37  ORIG EQUITY CASH RTNAFR TAX         0.3881    0.3870    0.3858    0.3831  C
     38  ORIG EQUITY PAYBACK AFR TAX         0.3881    0.7751    1.1609    1.9286
     40  NET INCOME-MARKET VALUE RTO         0.0842    0.0830    0.0817    0.0793
     42  DEFAULT RATIO                       0.8950    0.9726    1.0611    1.2770
     46  CUM. CASH LESS ORIG EQUITY          -5183.    -3306.     -884.     6674.
     48  MOD. I.R.R. ON ORIG EQUITY         -0.1584   -0.0519   -0.0091    0.0378
STOP --

Ready
```

REPORT SECTION NUMBER 1

* GROSS RENT	$ 13160.	* RATE OF GROWTH OF GROSS RENT	0.0000
* EXPENSES	$ 1300.	* RATE OF GROWTH OF EXPENSES	0.0000
* R E TAXES	$ 1610.	* RATE OF GROWTH OF R E TAXES	0.0000
* INCOME TAX RATE	0.5000	PROJECT VALUE GROWTH OF	6.0000
* VACANCY RATE	0.0130	WORKING CAPITAL LOAN RATE	0.1400
EQUITY DISCOUNT	0.1200	EXTRAORDINARY EXPENSES $	0.
RESALE COST	0.0600	REINVESTMENT RATE	0.0700
WKG CAPITAL RS $	0.	CAPITAL RESER INTEREST RATE	0.0700
INITIAL COST $	117929.	INITIAL EQUITY REQUIRED $	32714.

ALL '*' VALUES ARE AVERAGE AMOUNTS FOR HOLDING PERIOD. OF 5 YRS.

REPORT SECTION NUMBER 2

COMPONENT SUMMARY

TITLE	PCT. DEPR	BEGIN USE	USEFUL LIFE	DEPR METHOD		COST	SCH
LAND	0.00	1	0.	0	$	29288.	0
IMPROVEMENTS	0.90	1	33.	0	$	88641.	0

MORTGAGE SUMMARY

TITLE	INTR RATE	BEGIN YR.	END YR.	TERM		ORIG BALC	PCT VALUE
FIRST MORTGAGE	0.0962	1	27	27	$	85215.	0.723

P R O F O R M A

INVESTMENT ANALYSIS OF

CHEM. BANK SEMINAR

FOR

CASE PROBLEM - SEPR

CASH FLOW ANALYSIS

		1979	1980	1981	1983
1	GROSS RENT	13160.	13160.	13160.	13160.
2	LESS VACANCY	171.	171.	171.	171.
3	LESS REAL ESTATE TAXES	1610.	1610.	1610.	1610.
4	LESS EXPENSES	1300.	1300.	1300.	1300.
5	NET INCOME	10079.	10079.	10079.	10079.
6	LESS DEPRECIATION	27299.	27299.	27299.	27299.
7	LESS INTEREST	8172.	8102.	8025.	7846.
8	TAXABLE INCOME	-25391.	-25321.	-25244.	-25066.
9	PLUS DEPRECIATION	27299.	27299.	27299.	27299.
10	LESS PRINCIPAL PAYMENTS	697.	767.	844.	1022.
11	CASH THROW-OFF	1211.	1211.	1211.	1211.
12	LESS TAXES	2232.	2232.	2232.	2232.
13	LESS RESERVES AT 200.000	0.	0.	0.	0.
14	CASH FROM OPERATIONS	-1022.	-1022.	-1022.	-1022.
15	WORKING CAPITAL LOAN(CUM B)	1022.	2186.	3514.	6752.
16	DISTRIBUTABLE CASH AFR TAX	0.	0.	0.	0.
17	TAX SAVING ON OTHER INCOME	12696.	12661.	12622.	12533.
18	SPENDABLE CASH AFTER TAXES	12696.	12661.	12622.	12533.

C

Default Ratio Evaluation

Building "A"

16,650	=	.3868	*	.90	=	.3481
10,200	=	.2369	*	.90	=	.2132
6,000	=	.1394	*	.85	=	.1185
4,800	=	.1115	*	.85	=	.0948
4,200	=	.0976	*	.85	=	.0830
1,200	=	.0279	*	.80	=	.0223
43,050		1.0000				.8799
43,050	=	.7146	*	.8799	=	.6288
17,192	=	.2854	*	.7050	=	.2012
60,242		1.0000				.8300

```
1,CHEM. BANK SEMINAR,CASE PROBLEM - SEPR
10,1979,2,1,1.0,5,43050
40,133365,*
60,3054,*
70,16619,*
80,13419,*
100,.12,.50,.07
101,0,.015,6
102,.14,1,.06,0
103,2070,.0,.07,0
200,1,LAND
201,1,215814,.0,0
202,1,1,0,0
200,2,IMPROVEMENTS
201,2,1000950,.90,2
202,2,1,33,0
300,1,FIRST MORTGAGE
301,1,.7226,.09625,0,27
302,1,12,1,27,0
400,3
403,1,2,3,5
999,99
40,74368,*
60,5114,*
70,5868,*
80,4737,*
103,730,.0,.07,0
201,1,87304,.0,0
201,2,342376,.90,0
301,1,.7226,.09625,0,27
999,99
40,13160,*
60,171,*
70,1610,*
80,1300,*
103,200,.0,.07,0
201,1,29288,.0,0
201,2,88641,.90,0
301,1,.7226,.09625,0,27
999,99


Ready
```

REPORT SECTION NUMBER 1

* GROSS RENT	$ 74368.	* RATE OF GROWTH OF GROSS RENT	0.0000
* EXPENSES	$ 4737.	* RATE OF GROWTH OF EXPENSES	0.0000
* R E TAXES	$ 5868.	* RATE OF GROWTH OF R E TAXES	0.0000
* INCOME TAX RATE	0.5000	PROJECT VALUE GROWTH OF	6.0000
* VACANCY RATE	0.0688	WORKING CAPITAL LOAN RATE	0.1400
EQUITY DISCOUNT	0.1200	EXTRAORDINARY EXPENSES	$ 0.
RESALE COST	0.0600	REINVESTMENT RATE	0.0700
WKG CAPITAL RS	$ 0.	CAPITAL RESER INTEREST RATE	0.0700
INITIAL COST	$ 567817.	INITIAL EQUITY REQUIRED	$ 62313.

ALL '*' VALUES ARE AVERAGE AMOUNTS FOR HOLDING PERIOD. OF 5 YRS.
INITIAL COST DERIVED THROUGH BACKDOOR TYPE 1 USING 1 MORTGAGES

REPORT SECTION NUMBER 2

COMPONENT SUMMARY

TITLE	PCT. DEPR	BEGIN USE	USEFUL LIFE	DEPR METHOD	COST	SCH
LAND	0.00	1	0.	0	$ 87304.	0
IMPROVEMENTS	0.90	1	33.	0	$ 480513.	0

MORTGAGE SUMMARY

TITLE	INTR RATE	BEGIN YR.	END YR.	TERM	ORIG BALC	PCT VALUE
FIRST MORTGAGE	0.0962	1	27	27	$ 505504.	0.890

B

CASH FLOW ANALYSIS

		1979	1980	1981	1983
1	GROSS RENT	74368.	74368.	74368.	74368.
2	LESS VACANCY	5114.	5114.	5114.	5114.
3	LESS REAL ESTATE TAXES	5868.	5868.	5868.	5868.
4	LESS EXPENSES	4737.	4737.	4737.	4737.
5	NET INCOME	58649.	58649.	58649.	58649.
6	LESS DEPRECIATION	20641.	20641.	20641.	20641.
7	LESS INTEREST	48476.	48060.	47602.	46544.
8	TAXABLE INCOME	-10468.	-10052.	-9594.	-8537.
9	PLUS DEPRECIATION	20641.	20641.	20641.	20641.
10	LESS PRINCIPAL PAYMENTS	4132.	4548.	5005.	6063.
11	CASH THROW-OFF	6041.	6041.	6041.	6041.
12	LESS TAXES	0.	0.	0.	0.
13	LESS RESERVES AT 730.000	730.	730.	730.	730.
14	CASH FROM OPERATIONS	5311.	5311.	5311.	5311.
15	WORKING CAPITAL LOAN(CUM B)	0.	0.	0.	0.
16	DISTRIBUTABLE CASH AFR TAX	5311.	5311.	5311.	5311.
17	TAX SAVING ON OTHER INCOME	5234.	5026.	4797.	4268.
18	SPENDABLE CASH AFTER TAXES	10545.	10337.	10109.	9580.

REPORT SECTION NUMBER 4 PAGE 1

YEAR OF ANALYSIS

		1979	1980	1981	1983
B	AFTER TAX RATIO ANALYSIS				
35	RETURN ON NEW WORTH AFT TAX	-0.2107	0.4419	0.3561	0.2926
36	CHANGE IN NET WORTH AFT TAX	-23673.	6737.	6051.	7429.
37	CASH RTN ON ORIG CASH EQUIY	0.1692	0.1659	0.1622	0.1537
38	PERCENT ORIG EQUITY PAYBACK	0.1692	0.3351	0.4973	0.8093
39	PRESENT VALUE OF PROJECT	549419.	559334.	566960.	579260.
40	NET INCOME-MARKET VALUE RTO	0.1018	0.1003	0.0988	0.0959
41	LENDER BONUS INTEREST RATE	0.0000	0.0000	0.0000	0.0000
42	DEFAULT RATIO	0.8500	0.8500	0.8500	0.8500

REPORT SECTION NUMBER 7 PAGE 1

YEAR OF ANALYSIS

		1979	1980	1981	1983
B	MODIFIED INTERNAL RATE OF RETURN ANALYSIS				
	RETURN ANALYSIS WITHOUT SALE				
41	CUM. AFT TAX SPENDABLE CASH	10545.	21621.	33243.	58186.
44	MOD. I.R.R. ON ORIG EQUITY	-0.8308	-0.4110	-0.1890	-0.0136
45	MOD. I.R.R. ON CUM. EQUITY	-0.8308	-0.4110	-0.1890	-0.0136
	RETURN ANALYSIS WITH SALE				
46	CUM. CASH LESS ORIG EQUITY	-13128.	4684.	22357.	61441.
47	CUM. CASH LESS CUM. EQUITY	-13128.	4684.	22357.	61441.
48	MOD I.R.R. ON ORIG EQUITY	-0.2107	0.0369	0.1076	0.1471
49	MOD I.R.R. ON CUM. EQUITY	-0.2107	0.0369	0.1076	0.1471

REPORT SECTION NUMBER 1

* GROSS RENT	$ 13160.	* RATE OF GROWTH OF GROSS RENT	0.0000
* EXPENSES	$ 1300.	* RATE OF GROWTH OF EXPENSES	0.0000
* R E TAXES	$ 1610.	* RATE OF GROWTH OF R E TAXES	0.0000
* INCOME TAX RATE	0.5000	PROJECT VALUE GROWTH OF	6.0000
* VACANCY RATE	0.0130	WORKING CAPITAL LOAN RATE	0.1400
EQUITY DISCOUNT	0.1200	EXTRAORDINARY EXPENSES $	0.
RESALE COST	0.0600	REINVESTMENT RATE	0.0700
WKG CAPITAL RS $	0.	CAPITAL RESER INTEREST RATE	0.0700
INITIAL COST $	98584.	INITIAL EQUITY REQUIRED $	25384.

C ALL '*' VALUES ARE AVERAGE AMOUNTS FOR HOLDING PERIOD. OF 5 YRS.
INITIAL COST DERIVED THROUGH BACKDOOR TYPE 1 USING 1 MORTGAGES

REPORT SECTION NUMBER 2

C COMPONENT SUMMARY

TITLE	PCT. DEPR	BEGIN USE	USEFUL LIFE	DEPR METHOD	COST	SCH
LAND	0.00	1	0.	0	$ 29288.	0
IMPROVEMENTS	0.90	1	33.	0	$ 69296.	0

MORTGAGE SUMMARY

TITLE	INTR RATE	BEGIN YR.	END YR.	TERM	ORIG BALC	PCT VALUE
FIRST MORTGAGE	0.0962	1	27	27	$ 73200.	0.743

C

CASH FLOW ANALYSIS

		1979	1980	1981	1983
1	GROSS RENT	13160.	13160.	13160.	13160.
2	LESS VACANCY	171.	171.	171.	171.
3	LESS REAL ESTATE TAXES	1610.	1610.	1610.	1610.
4	LESS EXPENSES	1300.	1300.	1300.	1300.
5	NET INCOME	10079.	10079.	10079.	10079.
6	LESS DEPRECIATION	20641.	20641.	20641.	20641.
7	LESS INTEREST	7020.	6959.	6893.	6740.
8	TAXABLE INCOME	-17582.	-17521.	-17455.	-17302.
9	PLUS DEPRECIATION	20641.	20641.	20641.	20641.
10	LESS PRINCIPAL PAYMENTS	598.	659.	725.	878.
11	CASH THROW-OFF	2461.	2461.	2461.	2461.
12	LESS TAXES	1313.	1313.	1313.	1313.
13	LESS RESERVES AT 200.000	200.	200.	200.	200.
14	CASH FROM OPERATIONS	948.	948.	948.	948.
15	WORKING CAPITAL LOAN(CUM B)	0.	0.	0.	0.
16	DISTRIBUTABLE CASH AFR TAX	948.	948.	948.	948.
17	TAX SAVING ON OTHER INCOME	8791.	8761.	8728.	8651.
18	SPENDABLE CASH AFTER TAXES	9739.	9709.	9676.	9599.

Parking Information From Urban Land Institute

I. Truck Loading

One (1) truck loading dock for each 10,000 sq. ft. of building area

II. Parking Requirements

5.5 parking spaces for each 1000 GLA, this includes employee parking

III. Parking Space Size

One (1) parking space normally required 400-450 sq. ft. depending on design, topography, etc.

IV. Value of Parking Stall - Formula

A. $I = A * C * M * P * N * \#$

Where:

I = Annual Income
A = Average Unit Sale (in dollars)
C = Customers Per Car
M = Minimum Daily Turnover Per Space
P = Percent Of Customers Arriving By Car
N = Number Of Shopping Days Per Year
# = Number of Parking Spaces

B. Variation

$$A = \frac{I}{(C * M * P * N * \#)}$$

Value Per Day = A * C * M

Value Per Annum = Value Per Day * N

V. Gross Sales Estimate From Dollars and Cents of Shopping Centers

	GLA	$/Sq.Ft.	Average Sales	High Sales
Grocery	16,650	193.65 131.49	2,189,308	3,224,272
Hardware	10,200	75.86 57.74	588,948	773,772
Drugs	6,000	90.01 54.87	329,220	540,060
Furniture	4,800	60.80 35.35	169,680	291,840
Clothing	4,200	108.32 65.03	273,336	454,944
Miscellaneous	1,200	67.05	80,460	80,460
Financial	2,688	--	--	--
Liquor	1,344	186.49 79.50	106,840	25,064
Cleaners	1,000	67.45 30.28	30,280	67,450
Beauty Shop	1,000	90.19 52.01	52,010	90,190
Barber	670	67.57 40.30	27,001	45,272
Miscellaneous	7,858	67.05	526,879	526,879
Restaurant	2,632	78.28 49.93	131,416	206,033
			4,505,378	6,326,236

VI. Example

I = 4,505,378 - Average

I = 6,326,236 - High

$$A = \frac{I}{(C * M * P * N * \#)}$$

Where:
I = $4,505,378
C = 1.5
M = 3.0
P = .90
N = 325
# = 275

A = $12.45

Sales Per Day = $12.45 * 1.5 * 3.0 = $56.03

Sales Per Annum = $56.03 * 325 = $18,210

Project Modification

Land From "C"

2,632	= Under Building
18,324	= Parking
1,573	= Open Space
22,529	= Total Incro To "A" and "B" Parking

Building Cost			
A = 886,399			
B = 299,790			1,186,190
Intangibles			
A = 58,726			
B = 18,031			76,757
Land Under Building			
A = 43,050			
B = 14,560	57,610 * 1.30		74,893
Open Space			
A = 9,723			
B = 4,159	13,882 * 1.30		18,047
Parking Lot Lighting			10,740
Land For Parking			
Original	= 180,000		
Under "C"	2,632		
Open Space "C"	1,573		
	184,205 * 1.30		239,466
Parking Surface	184,205 * .5		92,102
Total Cost			1,698,195

Redesign of Parking to allocate 550 Sq. Ft./parking stall

$$\frac{184,205}{550} = 335 \text{ parking stalls}$$

Determine Gross Income

I = .6102 * 1.5 * 3.0 * .90 * 325 * 335

I = 269,064

Depreciation Classes*

Shopping Centers

Item	% of Total	Amount	Useful Life
Land		332,400	0
Shell	.45	614,608	33
Electric, Wiring, Plumbing	.1872	249,347	10
Heating & Air Conditioning	.20	273,159	15
Ceiling & Flooring	.0725	99,020	10
Paving	.06285	92,102	10
Roof	.01	13,658	15
Fence & Signs	.01	13,658	15
Parking Lot Lighting	.0075	10,243	15
		1,698,195	

* Coldwell Banker

Land Valuation

I. Regression Estimate For Time

A.	2.14	=	3.25
B.	1.38	=	1.94
C.	1.16	=	1.57
D.	1.53	=	2.06
E.	.96	=	1.24
F.	1.08	=	1.23
G.	1.73	=	1.95
H.	2.11	=	1.93

II. Adjustment For Comment/Comparability

		Adj.		
A.	3.25	.50	=	1.625
B.	1.94	.90	=	1.746
C.	1.57	1.20	=	1.884
D.	2.06	.85	=	1.751
E.	1.24	1.35	=	1.674
F.	1.23	1.00	=	1.230
G.	1.95	1.00	=	1.950
H.	1.93	.85	=	1.640

$1.69 \pm .217$

Low = 1.47

Avg. = 1.69

High = 1.90

1.	Chemical Bank (Project Title)	Case Solution (User Name)				
10.	1979 (Starting Year)	0 (Data Sets)	1 (Classification)	1.0 (% Owned Yr. 1)	10 (Holding Period)	57610 (Units/Year)
20.	(Back-Door)	(Back-Door Loans)	(Investment Default)	(B/4 Tax)	(Beginning Year)	(End Year)
30.	0 (Default Ratio)	0 (Cash-On-Cash)	2 (Year)	.05 (% Change)	.09695 (Equity B/4 Tax)	.10 (Reserve B/4 Tax)
40.	207733 (Fixed Income)	* (2)	(3)	(4)	(5)	
41.	(6)	(7)	(8)	(9)	(10)	
42.	(11)	(12)	(13)	(14)	(15)	
43.	(16)	(17)	(18)	(19)	(20)	
44.	(21)	(22)	(23)	(24)	(25)	
50.	(Variable Income)	(2)	(3)	(4)	(5)	
51.	(6)	(7)	(8)	(9)	(10)	
52.	(11)	(12)	(13)	(14)	(15)	
53.	(16)	(17)	(18)	(19)	(20)	
54.	(21)	(22)	(23)	(24)	(25)	
60.	.50 (Vacancy Rate)	.25 (2)	7842 (3)	* (4)	(5)	
61.	(6)	(7)	(8)	(9)	(10)	
62.	(11)	(12)	(13)	(14)	(15)	
63.	(16)	(17)	(18)	(19)	(20)	
64.	(21)	(22)	(23)	(24)	(25)	

	70,	13597	18129	22662	*	
		Real Estate Tax	2	3	4	5
	71,					
		6	7	8	9	10
	72,					
		11	12	13	14	15
	73,					
		16	17	18	19	20
	74,					
		21	22	23	24	25
	80,	18288	*			
		Fixed Expenses	2	3	4	5
	81,					
		6	7	8	9	10
	82,					
		11	12	13	14	15
	83,					
		16	17	18	19	20
	84,					
		21	22	23	24	25
	90,					
		Variable Expenses	2	3	4	5
	91,					
		6	7	8	9	10
	92,					
		11	12	13	14	15
	93,					
		16	17	18	19	20
	94,					
		21	22	23	24	25
	100,	.12	.50	.06		
		Discount Rate	Income Tax Rate	Reinvestment Rate		
	101,	0	.02	6		
		Extraordinary Exp.	Project Growth Rate	Project Growth Type		
	102,	.14	1	.07	0	
		Working Capital Loan	Ownership	Resale Cost Rate	Charge New Capital	
	103,	3000	400000	.06	500000	
		Reserves Witheld	Equity Reserves	Equity Reserve Rate	Reserve Maximum	

PARTNERSHIPS

110,	1,	Robert Johnson (Title (20 character maximum))			
111,	1,	.35 (Income Tax)	.20 (% of Spendable)	.20 (% Equity Contribution)	
112,	1,	.30 (% Equity Reversion)	.20 (% Tax Loss)	.20 (% Tax Payment)	.12 (Discount Rate)
113,	1,	.05 (Reinvestment Rate)	.0 (% Mortgage Liability)	1 (General Partner)	
110,	2,	Equity Backer-1 (Title)			
111,	2,	.50 (Income Tax)	.40 (% of Spendable)	.40 (% Equity Contribution)	
112,	2,	.35 (% Equity Reversion)	.40 (% Tax Loss)	.40 (% Tax Payment)	.14 (Discount Rate)
113,	2,	.07 (Reinvestment Rate)	.0 (% Mortgage Liability)	0 (General Partner)	
110,	3,	Equity Backer-2 (Title)			
111,	3,	.60 (Income Tax)	.40 (% of Spendable)	.40 (% Equity Contribution)	
112,	3,	.35 (% Equity Reversion)	.40 (% Tax Loss)	.40 (% Tax Payment)	.16 (Discount Rate)
113,	3,	.09 (Reinvestment Rate)	.0 (% Mortgage Liability)	0 (General Partner)	
110,	4,	(Title)			
111,	4,	(Income Tax)	(% of Spendable)	(% Equity Contribution)	
112,	4,	(% Equity Reversion)	(% Tax Loss)	(% Tax Payment)	(Discount Rate)
113,	4,	(Reinvestment Rate)	(% Mortgage Liability)	(General Partner)	
110,	5,	(Title)			
111,	5,	(Income Tax)	(% of Spendable)	(% Equity Contribution)	
112,	5,	(% Equity Reversion)	(% Tax Loss)	(% Tax Payment)	(Discount Rate)
113,	5,	(Reinvestment Rate)	(% Mortgage Liability)	(General Partner)	

COMPONENT ENTRIES

200, 1,	Land (Title (20 character maximum))			
201, 1,	332400 (Original Cost)	.0 (% Depreciable)	0 (Depreciation Method)	
202, 1,	1 (Starting Year)	0 (Useful Life)	0 (Switching)	
200, 2,	Shell (Title)			
201, 2,	614608 (Original Cost)	.90 (% Depreciable)	4 (Depreciation Method)	
202, 2,	1 (Starting Year)	33 (Useful Life)	0 (Switching)	
200, 3,	Elect/Wir/Pmb (Title)			
201, 3,	249347 (Original Cost)	.95 (% Depreciable)	4 (Depreciation Method)	
202, 3,	1 (Starting Year)	10 (Useful Life)	0 (Switching)	
200, 4,	HVAC (Title)			
201, 4,	273159 (Original Cost)	.90 (% Depreciable)	4 (Depreciation Method)	
202, 4,	1 (Starting Year)	15 (Useful Life)	0 (Switching)	
200, 5,	Ceiling + Floor (Title)			
201, 5,	99020 (Original Cost)	.90 (% Depreciable)	4 (Depreciation Method)	
202, 5,	1 (Starting Year)	10 (Useful Life)	0 (Switching)	
200, 6,	Paving (Title)			
201, 6,	92103 (Original Cost)	.95 (% Depreciable)	4 (Depreciation Method)	
202, 6,	1 (Starting Year)	10 (Useful Life)	0 (Switching)	
200, 7,	Roof Fence + Signs (Title)			
201, 7,	27316 (Original Cost)	.90 (% Depreciable)	4 (Depreciation Method)	
202, 7,	1 (Starting Year)	15 (Useful Life)	0 (Switching)	
200, 8,	Entreprenurial Skill (Title)			
201, 8,	-150000 (Original Cost)	1.0 (% Depreciable)	0 (Depreciation Method)	
202, 8,	1 (Starting Year)	1 (Useful Life)	0 (Switching)	

200, 9,	Lot Lighting (Title)			
201, 9,	10243 (Original Cost)	.90 (% Depreciable)	4 (Depreciation Method)	
202, 9,	1 (Starting Year)	15 (Useful Life)	0 (Switching)	
200, 10,	Equity Pull (Title)			
201, 10,	-250000 (Original Cost)	1.0 (% Depreciable)	9 (Depreciation Method)	
202, 10,	6 (Starting Year)	1 (Useful Life)	0 (Switching)	

MORTGAGE ENTRIES

300,	1,	First Mortgage (Title(20 character maximum))			
301,	1,	1189000 (Principal Amount)	.09625 (Annual Interest)	0 (Payment Period)	27 (Term)
302,	1,	12 (Payments/Year)	1 (Year Began)	5 (Year End)	3 (Refinanced by #)
303,	1,	(Bonus Interest)	(Base Amount)	(Base Type)	(Mortgage Factor)
300,	2,	Land Lease (Title)			
301,	2,	300000 (Principal Amount)	.08 (Annual Interest)	1.0 (Payment Period)	0 (Term)
302,	2,	1 (Payments/Year)	1 (Year Began)	10 (Year End)	0 (Refinanced by #)
303,	2,	.10 (Bonus Interest)	100000 (Base Amount)	5 (Base Type)	0 (Mortgage Factor)
300,	3,	Refinance Mtg. (Title)			
301,	3,	.88 (Principal Amount)	.0975 (Annual Interest)	0 (Payment Period)	27 (Term)
302,	3,	12 (Payments/Year)	6 (Year Began)	27 (Year End)	0 (Refinanced by #)
303,	3,	.10 (Bonus Interest)	100000 (Base Amount)	5 (Base Type)	0 (Mortgage Factor)
300,	4,	(Title)			
301,	4,	(Principal Amount)	(Annual Interest)	(Payment Period)	(Term)
302,	4,	(Payments/Year)	(Year Began)	(Year End)	(Refinanced by #)
303,	4,	(Bonus Interest)	(Base Amount)	(Base Type)	(Mortgage Factor)

OUTPUT OPTIONS (Enter "0" to suppress report printing; Enter "1" to permit report printing)

___ 400 9 , ___ , ___ , ___ , ___ , ___ , ___ , ___ , ___ , ___
1 2 3 4 5 6 7 8 9 10

Report Field Identifiers

Field #	Report Title	Field #	Report Title
1.	Summary of Income & Expense	6.	After Tax Ratios
2.	Component Summary	7.	Modified Internal Rate of Return
3.	Cash Flow	8.	Mortgage Amortization
4.	Market Value	9.	Depreciation Schedules
5.	Before Tax Ratios	10.	Partnership Report

* = Position #1 of Card 400

5 = Auto 1, 2, 3, 4, 5, 6, 7, 10

9 = Auto All

3 = Select Specific Line #'s (10 maximum)

PRINT YEARS (Enter any year number 1-25, in any order)

___ 403 1 , 2 , 3 , 4 , 5 , 6 , 9 , 10 , ___ , ___

99 = first entry line 403 means 10 year wide carriage output option.

```
1,CHEMICAL BANK,CASE SOLUTION
10,1979,0,1,1.0,10,57610
30,.0,0,2,.05,.09695,.10
40,207733,*
60,.50,.25,7842,*
70,13597,18129,22662,*
80,18288,*
100,.12,.50,.06,0
101,0,.02,6
102,.14,1,.07,0
103,3000,400000,.06,500000
110,1,ROBERT JOHNSON
111,1,.35,.20,.20
112,1,.30.20,.20,.12
113,1,.05,.0,1
110,2,EQUITY BACKER-1
111,2,.50,.40,.40
112,2,.35,.40,.40,.14
113,2,.07,.0,0
110,3,EQUITY BACKER-2
111,3,.60,.40,.40
112,3,.35,.40,.40,.16
113,3,.09,.0,0
200,1,LAND
201,1,332400,.0,0
202,1,1,0,0
200,2,SHELL
201,2,614608,.90,4
202,2,1,33,0
200,3,ELECT/WIR/PMB
201,3,249347,.95,4
202,3,1,10,0
200,4,HVAC
201,4,273159,.90,4
202,4,1,15,0
200,5,CEILING & FLOOR
201,5,99020,.90,4
202,5,1,10,0
200,6,PAVING
201,6,92103,.95,4
202,6,1,10,0
200,7,ROOF FENCE % SINGS
201,7,27316,.90,4
202,7,1,15,0
200,8,ENTREPRENEURIAL SKILL
201,8,-150000,1.0,0
202,8,1,1,0
300,1,FIRST MORTGAGE
301,1,1189000,.09625,0,27
302,1,12,1,5,3
300,2,LAND LEASE
301,2,300000,.08,1.0,0
302,2,1,1,10,0
303,2,.10,100000,5,0
300,3,REFINANCE
301,3,.88,.0975,0,27
302,3,12,6,27,0
303,3,.10,100000,5,0
```

```
200,9,LOT LIGHTING
201,9,10243,.90,4
202,9,1,15,0
200,10,EQUITY PULL
201,10,-250000,1.0,9
202,10,6,1,0
400,5
403,1,2,3,4,5,6,9,10
999,99
```

```
Ready

PETE CASE.SOL
#F /400,5/
400,5
#C /5/9/
400,9
#LOG
 67 lines

Ready

RUN MRCAX
ENTER INPUT FILE NAME
*CASE.SOL
```

DEPRECIATION SCHEDULE FOR SHELL

INITIAL COST 614608.
DEPRECIATION METHOD 4 PERCENT DEPRECIABLE 0.900
USEFUL LIFE 33. BEGINNING YEAR 1

YR	ANNUAL DEP.	CUMULATIVE STR. LINE	CUMULATIVE ACCELERATED	EXCESS
1	27937.	16762.	27937.	11175.
2	26667.	33524.	54604.	21080.
3	25455.	50286.	80058.	29772.
4	24298.	67048.	104356.	37308.
5	23193.	83810.	127549.	43739.
6	22139.	100572.	149688.	49116.
7	21133.	117334.	170821.	53487.
8	20172.	134096.	190993.	56897.
9	19255.	150858.	210248.	59390.
10	18380.	167620.	228628.	61008.

DEPRECIATION SCHEDULE FOR ELECT/WIR/PMB

INITIAL COST 249347.
DEPRECIATION METHOD 4 PERCENT DEPRECIABLE 0.950
USEFUL LIFE 10. BEGINNING YEAR 1

YR	ANNUAL DEP.	CUMULATIVE STR. LINE	CUMULATIVE ACCELERATED	EXCESS
1	37402.	23688.	37402.	13714.
2	31792.	47376.	69194.	21818.
3	27023.	71064.	96217.	25153.
4	22970.	94752.	119186.	24434.
5	19616.	118440.	138802.	20362.
6	19616.	142128.	158417.	16290.
7	19616.	165816.	178033.	12217.
8	19616.	189504.	197649.	8145.
9	19616.	213192.	217264.	4072.
10	19616.	236880.	236880.	0.

DEPRECIATION SCHEDULE FOR HVAC

INITIAL COST 273159.
DEPRECIATION METHOD 4 PERCENT DEPRECIABLE 0.900
USEFUL LIFE 15. BEGINNING YEAR 1

YR	ANNUAL DEP.	CUMULATIVE STR. LINE	CUMULATIVE ACCELERATED	EXCESS
1	27316.	16390.	27316.	10926.
2	24584.	32779.	51900.	19121.
3	22126.	49169.	74026.	24857.
4	19913.	65558.	93939.	28381.
5	17922.	81948.	111861.	29914.
6	16130.	98337.	127991.	29654.
7	14517.	114727.	142508.	27781.
8	13065.	131116.	155573.	24457.
9	12896.	147506.	168469.	20963.
10	12896.	163895.	181364.	17469.

DEPRECIATION SCHEDULE FOR CEILING & FLOOR

INITIAL COST 99020.
DEPRECIATION METHOD 4 PERCENT DEPRECIABLE 0.900
USEFUL LIFE 10. BEGINNING YEAR 1

YR	ANNUAL DEP.	CUMULATIVE STR. LINE	CUMULATIVE ACCELERATED	EXCESS
1	14853.	8912.	14853.	5941.
2	12625.	17824.	27478.	9654.
3	10731.	26735.	38209.	11474.
4	9122.	35647.	47331.	11684.
5	7753.	44559.	55084.	10525.
6	6807.	53471.	61891.	8420.
7	6807.	62383.	68698.	6315.
8	6807.	71294.	75505.	4210.
9	6807.	80206.	82311.	2105.
10	6807.	89118.	89118.	0.

DEPRECIATION SCHEDULE FOR PAVING

INITIAL COST 92103.
DEPRECIATION METHOD 4 PERCENT DEPRECIABLE 0.950
USEFUL LIFE 10. BEGINNING YEAR 1

YR	ANNUAL DEP.	CUMULATIVE STR. LINE	CUMULATIVE ACCELERATED	EXCESS
1	13815.	8750.	13815.	5066.
2	11743.	17500.	25559.	8059.
3	9982.	26249.	35540.	9291.
4	8484.	34999.	44025.	9026.
5	7246.	43749.	51270.	7521.
6	7246.	52499.	58516.	6017.
7	7246.	61248.	65761.	4513.
8	7246.	69998.	73007.	3009.
9	7246.	78748.	80252.	1504.
10	7246.	87498.	87498.	-0.

DEPRECIATION SCHEDULE FOR ROOF FENCE % SINGS

INITIAL COST 27316.
DEPRECIATION METHOD 4 PERCENT DEPRECIABLE 0.900
USEFUL LIFE 15. BEGINNING YEAR 1

YR	ANNUAL DEP.	CUMULATIVE STR. LINE	CUMULATIVE ACCELERATED	EXCESS
1	2732.	1639.	2732.	1093.
2	2458.	3278.	5190.	1912.
3	2213.	4917.	7403.	2486.
4	1991.	6556.	9394.	2838.
5	1792.	8195.	11186.	2991.
6	1613.	9834.	12799.	2965.
7	1452.	11473.	14251.	2778.
8	1307.	13112.	15557.	2446.
9	1290.	14751.	16847.	2096.
10	1290.	16390.	18137.	1747.

DEPRECIATION SCHEDULE FOR LOT LIGHTING

INITIAL COST 10243.
DEPRECIATION METHOD 4 PERCENT DEPRECIABLE 0.900
USEFUL LIFE 15. BEGINNING YEAR 1

YR	ANNUAL DEP.	CUMULATIVE STR. LINE	CUMULATIVE ACCELERATED	EXCESS
1	1024.	615.	1024.	410.
2	922.	1229.	1946.	717.
3	830.	1844.	2776.	932.
4	747.	2458.	3523.	1064.
5	672.	3073.	4195.	1122.
6	605.	3687.	4799.	1112.
7	544.	4302.	5344.	1042.
8	490.	4917.	5834.	917.
9	484.	5531.	6317.	786.
10	484.	6146.	6801.	655.

MORTGAGE AMORTIZATION SCHEDULE FOR FIRST MORTGAGE

MORTGAGE AMOUNT	1189000.	TERM	27
INTEREST RATE	0.0962	MORTGAGE FACTOR	0.00867248
PERIOD PAYMENT	10311.58	PAYMENTS PER YEAR	12
BONUS INTEREST	0.0000	TYPE 0 GREATER THAN	0.

YR	ANNUAL PAYMENT	INTEREST PAYMENT	PRINCIPAL PAYMENT	BALANCE	BONUS INT PAYMENT
1	123739.	114020.	9719.	1179281.	0.
2	123739.	113042.	10697.	1168584.	0.
3	123739.	111966.	11773.	1156811.	0.
4	123739.	110781.	12958.	1143853.	0.
5	123739.	109478.	14261.	1129592.	0.

MORTGAGE AMORTIZATION SCHEDULE FOR LAND LEASE

MORTGAGE AMOUNT	300000.	TERM	0
INTEREST RATE	0.0800	MORTGAGE FACTOR	0.00000000
PERIOD PAYMENT	1.00	PAYMENTS PER YEAR	1
BONUS INTEREST	0.1000	TYPE 5 GREATER THAN	100000.

YR	ANNUAL PAYMENT	INTEREST PAYMENT	PRINCIPAL PAYMENT	BALANCE	BONUS INT PAYMENT
1	1.	24000.	0.	300000.	0.
2	1939.	24000.	0.	300000.	1938.
3	5895.	24000.	0.	300000.	5894.
4	5895.	24000.	0.	300000.	5894.
5	5895.	24000.	0.	300000.	5894.
6	5895.	24000.	0.	300000.	5894.
7	5895.	24000.	0.	300000.	5894.
8	5895.	24000.	0.	300000.	5894.
9	5895.	24000.	0.	300000.	5894.
10	5895.	24000.	0.	300000.	5894.

MORTGAGE AMORTIZATION SCHEDULE FOR REFINANCE

MORTGAGE AMOUNT	1008812.	TERM	27
INTEREST RATE	0.0975	MORTGAGE FACTOR	0.00876170
PERIOD PAYMENT	8838.90	PAYMENTS PER YEAR	12
BONUS INTEREST	0.1000	TYPE 5 GREATER THAN	100000.

YR	ANNUAL PAYMENT	INTEREST PAYMENT	PRINCIPAL PAYMENT	BALANCE	BONUS INT PAYMENT
6	111961.	98005.	8062.	1000750.	5894.
7	111961.	97183.	8884.	991866.	5894.
8	111961.	96277.	9790.	982077.	5894.
9	111961.	95279.	10788.	971289.	5894.
10	111961.	94179.	11888.	959401.	5894.

REPORT SECTION NUMBER 1

* GROSS RENT	$ 207733.	* RATE OF GROWTH OF GROSS RENT	0.0000
* EXPENSES	$ 18288.	* RATE OF GROWTH OF EXPENSES	0.0000
* R E TAXES	$ 21302.	* RATE OF GROWTH OF R E TAXES	0.0648
* INCOME TAX RATE	0.5000	PROJECT VALUE GROWTH OF	6.0000
* VACANCY RATE	0.1052	WORKING CAPITAL LOAN RATE	0.1400
EQUITY DISCOUNT	0.1200	EXTRAORDINARY EXPENSES	$ 0.
RESALE COST	0.0700	REINVESTMENT RATE	0.0600
WKG CAPITAL RS	$ 400000.	CAPITAL RESER INTEREST RATE	0.0600
INITIAL COST	$ 1548196.	INITIAL EQUITY REQUIRED	$ 459196.

ALL '*' VALUES ARE AVERAGE AMOUNTS FOR HOLDING PERIOD. OF 10 YRS.

REPORT SECTION NUMBER 2

COMPONENT SUMMARY

TITLE	PCT. DEPR	BEGIN USE	USEFUL LIFE	DEPR METHOD		COST	SCH
LAND	0.00	1	0.	0	$	332400.	0
SHELL	0.90	1	33.	4	$	614608.	0
ELECT/WIR/PMB	0.95	1	10.	4	$	249347.	0
HVAC	0.90	1	15.	4	$	273159.	0
CEILING & FLOOR	0.90	1	10.	4	$	99020.	0
PAVING	0.95	1	10.	4	$	92103.	0
ROOF FENCE % SINGS	0.90	1	15.	4	$	27316.	0
ENTREPRENEURIAL SKIL	1.00	1	1.	0	$	-150000.	0
LOT LIGHTING	0.90	1	15.	4	$	10243.	0
EQUITY PULL	1.00	6	1.	9	$	-250000.	0

MORTGAGE SUMMARY

TITLE	INTR RATE	BEGIN YR.	END YR.	TERM		ORIG BALC	PCT VALUE
FIRST MORTGAGE	0.0962	1	5	27	$	1189000.	0.768
LAND LEASE	0.0800	1	10	0	$	300000.	0.194
REFINANCE	0.0975	6	27	27	$	1008812.	0.590

P R O F O R M A

INVESTMENT ANALYSIS OF

CHEMICAL BANK

FOR

CASE SOLUTION

R E P O R T S E C T I O N N U M B E R 3

CASH FLOW ANALYSIS

		1979	1980	1981	1982
1	GROSS RENT	207733.	207733.	207733.	207733.
2	LESS VACANCY	103867.	51933.	7842.	7842.
3	LESS REAL ESTATE TAXES	13597.	18129.	22662.	22662.
4	LESS EXPENSES	18288.	18288.	18288.	18288.
5	NET INCOME	71982.	119383.	158941.	158941.
6	LESS DEPRECIATION	125079.	110791.	98359.	87525.
7	LESS INTEREST	138020.	137042.	141860.	140675.
8	TAXABLE INCOME	-191117.	-128451.	-81278.	-69259.
9	PLUS DEPRECIATION	125079.	110791.	98359.	87525.
10	LESS PRINCIPAL PAYMENTS	9719.	10697.	11773.	12958.
11	CASH THROW-OFF	-75757.	-28356.	5308.	5308.
12	LESS TAXES	28249.	3606.	1741.	263.
13	LESS RESERVES AT 3000.000	0.	0.	3000.	3000.
14	CASH FROM OPERATIONS	0.	0.	567.	2045.
15	WORKING CAPITAL LOAN(CUM B)	0.	0.	0.	0.
16	DISTRIBUTABLE CASH AFR TAX	0.	0.	567.	2045.
17	TAX SAVING ON OTHER INCOME	95559.	64225.	40639.	34630.
18	SPENDABLE CASH AFTER TAXES	95559.	64225.	41206.	36674.

REPORT SECTION NUMBER 4 PAGE 1

CASH FLOW ANALYSIS

		1979	1980	1981	1982
	MARKET VALUE				
19	BY METHOD - 6 - AT 0.0200	1579160.	1610743.	1642958.	1675817.
20	LESS RESALE COST	110541.	112752.	115007.	117307.
21	LESS LOAN BALANCES	1479281.	1468584.	1456811.	1443853.
22	PLUS CUM. CASH RESERVES	319994.	307232.	328666.	351385.
23	B/4 TAX NET WORTH	309332.	336639.	399806.	466043.
24	CAPITAL GAIN (IF SOLD)	-152823.	-46696.	60019.	167333.
25	CAPITAL GAINS TAX	-30565.	-9339.	12004.	33467.
26	TAX PREFERENCE TAX	0.	0.	0.	0.
27	INCOME TAX ON EXCESS DEP	99162.	116181.	126983.	132368.
28	TOTAL TAX ON SALE	83880.	111511.	138986.	165834.
29	AFTER TAX NET WORTH	225452.	225128.	260819.	300208.

REPORT SECTION NUMBER 5 PAGE 1

YEAR OF ANALYSIS

		1979	1980	1981	1982
	BEFORE TAX RATIO ANALYSIS				
30	RETURN ON NET WORTH B/4 TAX	-0.3264	0.0883	0.2034	0.1789
31	CHANGE IN NET WORTH B/4 TAX	-149864.	27307.	63167.	66237.
32	CASH RTN ON ORIG CASH EQUIY	-0.1650	-0.0618	0.0116	0.0116
33	PERCENT ORIG EQUITY PAYBACK	0.0000	0.0000	0.0012	0.0057
34	PRESENT VALUE OF PROJECT	1697548.	1667121.	1687106.	1702084.

REPORT SECTION NUMBER 6

YEAR OF ANALYSIS

		1979	1980	1981	1982
	AFTER TAX RATIO ANALYSIS				
35	RETURN ON NEW WORTH AFT TAX	-0.3009	0.2834	0.3416	0.2916
36	CHANGE IN NET WORTH AFT TAX	-233744.	-324.	35691.	39389.
37	CASH RTN ON ORIG CASH EQUIY	0.2081	0.1399	0.0897	0.0799
38	PERCENT ORIG EQUITY PAYBACK	0.2081	0.3480	0.4377	0.5176
39	PRESENT VALUE OF PROJECT	1775616.	1804991.	1840496.	1868945.
40	NET INCOME-MARKET VALUE RTO	0.0456	0.0741	0.0967	0.0948
41	LENDER BONUS INTEREST RATE	0.0000	0.0000	0.0040	0.0040
42	DEFAULT RATIO	0.8647	0.8865	0.9367	0.9367

REPORT SECTION NUMBER 7

YEAR OF ANALYSIS

		1979	1980	1981	1982
	MODIFIED INTERNAL RATE OF RETURN ANALYSIS				
	RETURN ANALYSIS WITHOUT SALE				
41	CUM. AFT TAX SPENDABLE CASH	95559.	165518.	216655.	266328.
44	MOD. I.R.R. ON ORIG EQUITY	-0.7919	-0.3996	-0.2215	-0.1273
45	MOD. I.R.R. ON CUM. EQUITY	-0.7919	-0.3996	-0.2215	-0.1273
	RETURN ANALYSIS WITH SALE				
46	CUM. CASH LESS ORIG EQUITY	-138186.	-68550.	18278.	107341.
47	CUM. CASH LESS CUM. EQUITY	-138186.	-68550.	18278.	107341.
48	MOD I.R.R. ON ORIG EQUITY	-0.3009	-0.0777	0.0131	0.0539
49	MOD I.R.R. ON CUM. EQUITY	-0.3009	-0.0777	0.0131	0.0539

CASH FLOW ANALYSIS

		1983	1984	1987	1988
1	GROSS RENT	207733.	207733.	207733.	207733.
2	LESS VACANCY	7842.	7842.	7842.	7842.
3	LESS REAL ESTATE TAXES	22662.	22662.	22662.	22662.
4	LESS EXPENSES	18288.	18288.	18288.	18288.
5	NET INCOME	158941.	158941.	158941.	158941.
6	LESS DEPRECIATION	78194.	74154.	67592.	66717.
7	LESS INTEREST	139372.	133793.	131067.	129967.
8	TAXABLE INCOME	-58625.	-49007.	-39718.	-37743.
9	PLUS DEPRECIATION	78194.	74154.	67592.	66717.
10	LESS PRINCIPAL PAYMENTS	14261.	8062.	10788.	11888.
11	CASH THROW-OFF	5308.	17086.	17086.	17086.
12	LESS TAXES	0.	0.	0.	0.
13	LESS RESERVES AT 3000.000	3000.	3000.	3000.	3000.
14	CASH FROM OPERATIONS	2308.	0.	14086.	14086.
15	WORKING CAPITAL LOAN(CUM B)	0.	0.	0.	0.
16	DISTRIBUTABLE CASH AFR TAX	2308.	0.	14086.	14086.
17	TAX SAVING ON OTHER INCOME	29312.	24503.	19859.	18871.
18	SPENDABLE CASH AFTER TAXES	31620.	24503.	33945.	32957.

REPORT SECTION NUMBER 4 PAGE 2

CASH FLOW ANALYSIS

		1983	1984	1987	1988
	MARKET VALUE				
19	BY METHOD - 6 - AT 0.0200	1709334.	1743520.	1850237.	1887242.
20	LESS RESALE COST	119653.	122046.	129517.	132107.
21	LESS LOAN BALANCES	1429592.	1300750.	1271289.	1259401.
22	PLUS CUM. CASH RESERVES	375469.	44303.	62316.	69055.
23	B/4 TAX NET WORTH	535557.	365026.	511748.	564790.
24	CAPITAL GAIN (IF SOLD)	275258.	383806.	713317.	824486.
25	CAPITAL GAINS TAX	55052.	76761.	142663.	164897.
26	TAX PREFERENCE TAX	0.	0.	0.	0.
27	INCOME TAX ON EXCESS DEP	133087.	131787.	120459.	115440.
28	TOTAL TAX ON SALE	188139.	208548.	263122.	280337.
29	AFTER TAX NET WORTH	347419.	156478.	248626.	284453.

REPORT SECTION NUMBER 5 PAGE 2

YEAR OF ANALYSIS

		1983	1984	1987	1988
	BEFORE TAX RATIO ANALYSIS				
30	RETURN ON NET WORTH B/4 TAX	0.1605	-0.5120	0.1475	0.1370
31	CHANGE IN NET WORTH B/4 TAX	69515.	-170531.	50885.	53042.
32	CASH RTN ON ORIG CASH EQUIY	0.0116	0.0372	0.0372	0.0372
33	PERCENT ORIG EQUITY PAYBACK	0.0107	0.0107	0.1027	0.1334
34	PRESENT VALUE OF PROJECT	1712807.	1422319.	1442718.	1445524.

REPORT SECTION NUMBER 6 PAGE 2

YEAR OF ANALYSIS

		1983	1984	1987	1988
AFTER TAX RATIO ANALYSIS					
35	RETURN ON NEW WORTH AFT TAX	0.2626	-0.4791	0.3127	0.2767
36	CHANGE IN NET WORTH AFT TAX	47210.	-190940.	33367.	35827.
37	CASH RTN ON ORIG CASH EQUIY	0.0689	0.0534	0.0739	0.0718
38	PERCENT ORIG EQUITY PAYBACK	0.5864	0.6398	0.8700	0.9417
39	PRESENT VALUE OF PROJECT	1893234.	1607602.	1660986.	1673527.
40	NET INCOME-MARKET VALUE RTO	0.0930	0.0912	0.0859	0.0842
41	LENDER BONUS INTEREST RATE	0.0041	0.0090	0.0092	0.0093
42	DEFAULT RATIO	0.9367	0.8800	0.8800	0.8800

REPORT SECTION NUMBER 7 PAGE 2

YEAR OF ANALYSIS

		1983	1984	1987	1988
MODIFIED INTERNAL RATE OF RETURN ANALYSIS					
RETURN ANALYSIS WITHOUT SALE					
41	CUM. AFT TAX SPENDABLE CASH	313928.	357267.	537856.	603085.
44	MOD. I.R.R. ON ORIG EQUITY	-0.0732	-0.0410	0.0177	0.0276
45	MOD. I.R.R. ON CUM. EQUITY	-0.0732	0.0120	0.0549	0.0613
RETURN ANALYSIS WITH SALE					
46	CUM. CASH LESS ORIG EQUITY	202151.	54550.	327286.	428342.
47	CUM. CASH LESS CUM. EQUITY	202151.	181207.	453944.	554999.
48	MOD I.R.R. ON ORIG EQUITY	0.0757	0.0189	0.0616	0.0681
49	MOD I.R.R. ON CUM. EQUITY	0.0757	0.0752	0.1004	0.1031

PARTNERSHIP INVESTMENT SUMMARY

FOR

ROBERT JOHNSON

OWNERSHIP FORM

INDIVIDUAL

INCOME TAX RATE	0.3500	SHARE OF EQUITY CONTRIBUTION	0.2000
MAX. CAPITAL GAIN RATE	0.1750	INITIAL CASH CONTRIBUTION	91839.
DISCOUNT RATE	0.1200	SHARE OF EQUITY REVERSION	0.3000
REINVESTMENT RATE	0.0500	SHARE OF DISTRIBUTABLE CASH	0.2000
SHARE INC TAX PMT	0.2000	MAX. BASIS AMOUNT	328270.

GENERAL PARTNER SHARE OF TAX LOSSES 0.2000
W/ CONTRACT LIABILITY OF 55104.

CASH FLOW	1979	1980	1981	1982
TAXABLE INCOME	-38223.	-25690.	-16256.	-13852.
CASH THROW-OFF	-15151.	-5671.	1062.	1062.
LESS TAXES	0.	0.	0.	0.
DISTRIBUTABLE CASH AFTER TAX	0.	0.	713.	1009.
TAX SAVINGS ON OTHER INCOME	13378.	8992.	5689.	4848.
SPENDABLE CASH AFTER TAXES	13378.	8992.	6403.	5857.
NET WORTH OF SHARE	92799.	100992.	119942.	139813.
CAPITAL GAIN (IF SOLD)	-45847.	-14009.	18006.	50200.
CAPITAL GAIN TAX	-2808.	-858.	3151.	8820.
TAX PREFERENCE TAX	0.	0.	0.	2265.
INCOME TAX ON EXCESS DEPR	20824.	24398.	26666.	27797.
TOTAL TAX ON SALE	18016.	23540.	29817.	38882.
AFTER TAX NET WORTH	74784.	77452.	90124.	100931.

BEFORE TAX RATIO ANALYSIS	1979	1980	1981	1982
CASH RTN ON ORIG CASH EQUITY	-0.1031	-0.0386	0.0072	0.0072
PERCENT ORIG EQUITY PAYBACK	0.0000	0.0000	0.0049	0.0117
PRESENT VALUE OF SHARE	69329.	62461.	68079.	72235.

AFTER TAX RATIO ANALYSIS	1979	1980	1981	1982
CASH RTN ON ORIG CASH EQUITY	0.0910	0.0612	0.0436	0.0399
PERCENT ORIG EQUITY PAYBACK	0.0910	0.1522	0.1958	0.2357
PRESENT VALUE OF SHARE	78716.	80857.	87819.	91536.

PARTNERSHIP INVESTMENT SUMMARY

FOR

ROBERT JOHNSON

OWNERSHIP FORM

INDIVIDUAL

MODIFIED INTERNAL RATE OF RETURN ANALYSIS

RETURN ANALYSIS WITHOUT SALE

	1979	1980	1981	1982
CUM.AFT TAX SPENDABLE CASH,	13378.	23039.	30594.	37980.
MOD. I.R.R. ON ORIG EQUITY	-0.9090	-0.6040	-0.4073	-0.2870
MOD. I.R.R. ON CUM. EQUITY	-0.9090	-0.6040	-0.4073	-0.2870

RETURN ANALYSIS WITH SALE

	1979	1980	1981	1982
CUM. CASH LESS ORIG EQUITY	-3677.	8651.	28879.	47072.
CUM. CASH LESS CUM. EQUITY	-58781.	-46452.	-26225.	-8032.
MOD. I.R.R. ON ORIG EQUITY	-0.4000	-0.1730	-0.0634	-0.0140
MOD. I.R.R. ON CUM. EQUITY	-0.4000	-0.1730	-0.0634	-0.0140

PARTNERSHIP INVESTMENT SUMMARY

FOR

ROBERT JOHNSON

OWNERSHIP FORM

INDIVIDUAL

INCOME TAX RATE	0.3500	SHARE OF EQUITY CONTRIBUTION	0.2000
MAX. CAPITAL GAIN RATE	0.1750	INITIAL CASH CONTRIBUTION	91839.
DISCOUNT RATE	0.1200	SHARE OF EQUITY REVERSION	0.3000
REINVESTMENT RATE	0.0500	SHARE OF DISTRIBUTABLE CASH	0.2000
SHARE INC TAX PMT	0.2000	MAX. BASIS AMOUNT	328270.

GENERAL PARTNER SHARE OF TAX LOSSES 0.2000
W/ CONTRACT LIABILITY OF 55104.

CASH FLOW	1983	1984	1987	1988
TAXABLE INCOME	-11725.	-9801.	-7944.	-7549.
CASH THROW-OFF	1062.	3417.	3417.	3417.
LESS TAXES	0.	0.	0.	0.
DISTRIBUTABLE CASH AFTER TAX	1062.	600.	3417.	3417.
TAX SAVINGS ON OTHER INCOME	4104.	3430.	2780.	2642.
SPENDABLE CASH AFTER TAXES	5165.	4030.	6197.	6059.
NET WORTH OF SHARE	160667.	109508.	153524.	169437.
CAPITAL GAIN (IF SOLD)	82577.	115142.	213995.	247346.
CAPITAL GAIN TAX	20152.	31550.	66148.	77821.
TAX PREFERENCE TAX	4693.	7136.	14550.	17051.
INCOME TAX ON EXCESS DEPR	27948.	27675.	25296.	24242.
TOTAL TAX ON SALE	52794.	66361.	105994.	119114.
AFTER TAX NET WORTH	107874.	43147.	47530.	50323.

BEFORE TAX RATIO ANALYSIS	1983	1984	1987	1988
CASH RTN ON ORIG CASH EQUITY	0.0072	0.0281	0.0281	0.0281
PERCENT ORIG EQUITY PAYBACK	0.0189	0.0278	0.1121	0.1402
PRESENT VALUE OF SHARE	75150.	41195.	45235.	45527.

AFTER TAX RATIO ANALYSIS	1983	1984	1987	1988
CASH RTN ON ORIG CASH EQUITY	0.0352	0.0331	0.0510	0.0498
PERCENT ORIG EQUITY PAYBACK	0.2708	0.3604	0.5177	0.5675
PRESENT VALUE OF SHARE	91534.	54225.	57284.	58298.

PARTNERSHIP INVESTMENT SUMMARY

FOR

ROBERT JOHNSON

OWNERSHIP FORM

INDIVIDUAL

MODIFIED INTERNAL RATE OF RETURN ANALYSIS

RETURN ANALYSIS WITHOUT SALE

	1983	1984	1987	1988
CUM.AFT TAX SPENDABLE CASH,	45045.	51327.	79544.	89581.
MOD. I.R.R. ON ORIG EQUITY	-0.2106	-0.1608	-0.0659	-0.0483
MOD. I.R.R. ON CUM. EQUITY	-0.2106	-0.1339	-0.0461	-0.0301

RETURN ANALYSIS WITH SALE

	1983	1984	1987	1988
CUM. CASH LESS ORIG EQUITY	61079.	2636.	35235.	48064.
CUM. CASH LESS CUM. EQUITY	5975.	-27136.	5463.	18292.
MOD. I.R.R. ON ORIG EQUITY	0.0080	-0.0710	-0.0160	-0.0049
MOD. I.R.R. ON CUM. EQUITY	0.0080	-0.0412	0.0049	0.0141

PARTNERSHIP INVESTMENT SUMMARY

FOR

EQUITY BACKER-1

OWNERSHIP FORM

INDIVIDUAL

INCOME TAX RATE	0.5000	SHARE OF EQUITY CONTRIBUTION	0.4000
MAX. CAPITAL GAIN RATE	0.2500	INITIAL CASH CONTRIBUTION	183678.
DISCOUNT RATE	0.1400	SHARE OF EQUITY REVERSION	0.3500
REINVESTMENT RATE	0.0700	SHARE OF DISTRIBUTABLE CASH	0.4000
SHARE INC TAX PMT	0.4000	MAX. BASIS AMOUNT	656540.
LIMITED PARTNER		SHARE OF TAX LOSSES	0.4000

CASH FLOW	1979	1980	1981	1982
TAXABLE INCOME	-76447.	-51380.	-32511.	-27704.
CASH THROW-OFF	-30303.	-11343.	2123.	2123.
LESS TAXES	0.	0.	0.	0.
DISTRIBUTABLE CASH AFTER TAX	0.	0.	1427.	2018.
TAX SAVINGS ON OTHER INCOME	38223.	25690.	16256.	13852.
SPENDABLE CASH AFTER TAXES	38223.	25690.	17682.	15870.
NET WORTH OF SHARE	108266.	117824.	139932.	163115.
CAPITAL GAIN (IF SOLD)	-53488.	-16343.	21007.	58566.
CAPITAL GAIN TAX	-6686.	-2043.	5252.	15498.
TAX PREFERENCE TAX	0.	0.	75.	2892.
INCOME TAX ON EXCESS DEPR	34707.	40663.	44444.	46329.
TOTAL TAX ON SALE	28021.	38620.	49771.	64719.
AFTER TAX NET WORTH	80245.	79203.	90161.	98396.

BEFORE TAX RATIO ANALYSIS	1979	1980	1981	1982
CASH RTN ON ORIG CASH EQUITY	-0.1650	-0.0618	0.0116	0.0116
PERCENT ORIG EQUITY PAYBACK	0.0000	0.0000	0.0078	0.0188
PRESENT VALUE OF SHARE	68389.	55352.	60574.	63958.

AFTER TAX RATIO ANALYSIS	1979	1980	1981	1982
CASH RTN ON ORIG CASH EQUITY	0.2081	0.1399	0.0963	0.0864
PERCENT ORIG EQUITY PAYBACK	0.2081	0.3480	0.4442	0.5306
PRESENT VALUE OF SHARE	103920.	114242.	126088.	132887.

PARTNERSHIP INVESTMENT SUMMARY

FOR

EQUITY BACKER-1

OWNERSHIP FORM

INDIVIDUAL

MODIFIED INTERNAL RATE OF RETURN ANALYSIS

RETURN ANALYSIS WITHOUT SALE

	1979	1980	1981	1982
CUM.AFT TAX SPENDABLE CASH,	38223.	66589.	88933.	111028.
MOD. I.R.R. ON ORIG EQUITY	-0.7919	-0.3979	-0.2148	-0.1183
MOD. I.R.R. ON CUM. EQUITY	-0.7919	-0.3979	-0.2148	-0.1183

RETURN ANALYSIS WITH SALE

	1979	1980	1981	1982
CUM. CASH LESS ORIG EQUITY	-65210.	-37886.	-4584.	25745.
CUM. CASH LESS CUM. EQUITY	-65210.	-37886.	-4584.	25745.
MOD. I.R.R. ON ORIG EQUITY	-0.3550	-0.1091	-0.0084	0.0333
MOD. I.R.R. ON CUM. EQUITY	-0.3550	-0.1091	-0.0084	0.0333

PARTNERSHIP INVESTMENT SUMMARY

FOR

EQUITY BACKER-1

OWNERSHIP FORM

INDIVIDUAL

INCOME TAX RATE	0.5000	SHARE OF EQUITY CONTRIBUTION	0.4000
MAX. CAPITAL GAIN RATE	0.2500	INITIAL CASH CONTRIBUTION	183678.
DISCOUNT RATE	0.1400	SHARE OF EQUITY REVERSION	0.3500
REINVESTMENT RATE	0.0700	SHARE OF DISTRIBUTABLE CASH	0.4000
SHARE INC TAX PMT	0.4000	MAX. BASIS AMOUNT	656540.
LIMITED PARTNER		SHARE OF TAX LOSSES	0.4000

CASH FLOW	1983	1984	1987	1988
TAXABLE INCOME	-23450.	-19603.	-15887.	-15097.
CASH THROW-OFF	2123.	6834.	6834.	6834.
LESS TAXES	0.	0.	0.	0.
DISTRIBUTABLE CASH AFTER TAX	2123.	1200.	6834.	6834.
TAX SAVINGS ON OTHER INCOME	11725.	9801.	7944.	7549.
SPENDABLE CASH AFTER TAXES	13848.	11001.	14778.	14383.
NET WORTH OF SHARE	187445.	127759.	179112.	197676.
CAPITAL GAIN (IF SOLD)	96340.	134332.	249661.	288570.
CAPITAL GAIN TAX	28719.	42016.	82381.	96000.
TAX PREFERENCE TAX	5726.	8575.	17225.	20143.
INCOME TAX ON EXCESS DEPR	46581.	46125.	42161.	40404.
TOTAL TAX ON SALE	81025.	96717.	141766.	156546.
AFTER TAX NET WORTH	106420.	31043.	37345.	41130.

BEFORE TAX RATIO ANALYSIS	1983	1984	1987	1988
CASH RTN ON ORIG CASH EQUITY	0.0116	0.0514	0.0514	0.0514
PERCENT ORIG EQUITY PAYBACK	0.0303	0.0509	0.2050	0.2564
PRESENT VALUE OF SHARE	65837.	29803.	33904.	33992.

AFTER TAX RATIO ANALYSIS	1983	1984	1987	1988
CASH RTN ON ORIG CASH EQUITY	0.0754	0.0827	0.1111	0.1081
PERCENT ORIG EQUITY PAYBACK	0.6060	0.9196	1.2645	1.3726
PRESENT VALUE OF SHARE	137092.	100975.	114545.	118035.

PARTNERSHIP INVESTMENT SUMMARY

FOR

EQUITY BACKER-1

OWNERSHIP FORM

INDIVIDUAL

MODIFIED INTERNAL RATE OF RETURN ANALYSIS

RETURN ANALYSIS WITHOUT SALE

	1983	1984	1987	1988
CUM.AFT TAX SPENDABLE CASH,	132648.	152935.	236601.	267546.
MOD. I.R.R. ON ORIG EQUITY	-0.0630	-0.0301	0.0285	0.0383
MOD. I.R.R. ON CUM. EQUITY	-0.0630	0.0235	0.0661	0.0724

RETURN ANALYSIS WITH SALE

	1983	1984	1987	1988
CUM. CASH LESS ORIG EQUITY	55390.	299.	90268.	124998.
CUM. CASH LESS CUM. EQUITY	55390.	50962.	140931.	175661.
MOD. I.R.R. ON ORIG EQUITY	0.0541	0.0003	0.0454	0.0533
MOD. I.R.R. ON CUM. EQUITY	0.0541	0.0555	0.0836	0.0878

PARTNERSHIP INVESTMENT SUMMARY

FOR

EQUITY BACKER-2

OWNERSHIP FORM

INDIVIDUAL

INCOME TAX RATE	0.6000	SHARE OF EQUITY CONTRIBUTION	0.4000
MAX. CAPITAL GAIN RATE	0.3000	INITIAL CASH CONTRIBUTION	183678.
DISCOUNT RATE	0.1600	SHARE OF EQUITY REVERSION	0.3500
REINVESTMENT RATE	0.0900	SHARE OF DISTRIBUTABLE CASH	0.4000
SHARE INC TAX PMT	0.4000	MAX. BASIS AMOUNT	656540.
LIMITED PARTNER		SHARE OF TAX LOSSES	0.4000

CASH FLOW	1979	1980	1981	1982
TAXABLE INCOME	-76447.	-51380.	-32511.	-27704.
CASH THROW-OFF	-30303.	-11343.	2123.	2123.
LESS TAXES	0.	0.	0.	0.
DISTRIBUTABLE CASH AFTER TAX	0.	0.	1427.	2018.
TAX SAVINGS ON OTHER INCOME	45868.	30828.	19507.	16622.
SPENDABLE CASH AFTER TAXES	45868.	30828.	20934.	18640.
NET WORTH OF SHARE	108266.	117824.	139932.	163115.
CAPITAL GAIN (IF SOLD)	-53488.	-16343.	21007.	58566.
CAPITAL GAIN TAX	-9628.	-2942.	6302.	17998.
TAX PREFERENCE TAX	0.	0.	75.	2892.
INCOME TAX ON EXCESS DEPR	41648.	48796.	53333.	55594.
TOTAL TAX ON SALE	32020.	45854.	59710.	76485.
AFTER TAX NET WORTH	76246.	71970.	80222.	86630.

BEFORE TAX RATIO ANALYSIS	1979	1980	1981	1982
CASH RTN ON ORIG CASH EQUITY	-0.1650	-0.0618	0.0116	0.0116
PERCENT ORIG EQUITY PAYBACK	0.0000	0.0000	0.0078	0.0188
PRESENT VALUE OF SHARE	67210.	53010.	56456.	58067.

AFTER TAX RATIO ANALYSIS	1979	1980	1981	1982
CASH RTN ON ORIG CASH EQUITY	0.2497	0.1678	0.1140	0.1015
PERCENT ORIG EQUITY PAYBACK	0.2497	0.4176	0.5315	0.6330
PRESENT VALUE OF SHARE	105271.	115937.	127258.	134003.

PARTNERSHIP INVESTMENT SUMMARY

FOR

EQUITY BACKER-2

OWNERSHIP FORM

INDIVIDUAL

MODIFIED INTERNAL RATE OF RETURN ANALYSIS

RETURN ANALYSIS WITHOUT SALE

	1979	1980	1981	1982
CUM.AFT TAX SPENDABLE CASH,	45868.	80825.	109032.	137485.
MOD. I.R.R. ON ORIG EQUITY	-0.7503	-0.3367	-0.1596	-0.0699
MOD. I.R.R. ON CUM. EQUITY	-0.7503	-0.3367	-0.1596	-0.0699

RETURN ANALYSIS WITH SALE

	1979	1980	1981	1982
CUM. CASH LESS ORIG EQUITY	-61564.	-30884.	5576.	40437.
CUM. CASH LESS CUM. EQUITY	-61564.	-30884.	5576.	40437.
MOD. I.R.R. ON ORIG EQUITY	-0.3352	-0.0879	0.0100	0.0510
MOD. I.R.R. ON CUM. EQUITY	-0.3352	-0.0879	0.0100	0.0510

PARTNERSHIP INVESTMENT SUMMARY

FOR

EQUITY BACKER-2

OWNERSHIP FORM

INDIVIDUAL

INCOME TAX RATE	0.6000	SHARE OF EQUITY CONTRIBUTION	0.4000
MAX. CAPITAL GAIN RATE	0.3000	INITIAL CASH CONTRIBUTION	183678.
DISCOUNT RATE	0.1600	SHARE OF EQUITY REVERSION	0.3500
REINVESTMENT RATE	0.0900	SHARE OF DISTRIBUTABLE CASH	0.4000
SHARE INC TAX PMT	0.4000	MAX. BASIS AMOUNT	656540.

LIMITED PARTNER — SHARE OF TAX LOSSES 0.4000

CASH FLOW	1983	1984	1987	1988
TAXABLE INCOME	-23450.	-19603.	-15887.	-15097.
CASH THROW-OFF	2123.	6834.	6834.	6834.
LESS TAXES	0.	0.	0.	0.
DISTRIBUTABLE CASH AFTER TAX	2123.	1200.	6834.	6834.
TAX SAVINGS ON OTHER INCOME	14070.	11762.	9532.	9058.
SPENDABLE CASH AFTER TAXES	16193.	12962.	16367.	15893.
NET WORTH OF SHARE	187445.	127759.	179112.	197676.
CAPITAL GAIN (IF SOLD)	96340.	134332.	249661.	288570.
CAPITAL GAIN TAX	31219.	44516.	84881.	98500.
TAX PREFERENCE TAX	5726.	8575.	17225.	20143.
INCOME TAX ON EXCESS DEPR	55897.	55351.	50593.	48485.
TOTAL TAX ON SALE	92841.	108442.	152698.	167127.
AFTER TAX NET WORTH	94604.	19318.	26413.	30549.

BEFORE TAX RATIO ANALYSIS	1983	1984	1987	1988
CASH RTN ON ORIG CASH EQUITY	0.0116	0.0514	0.0514	0.0514
PERCENT ORIG EQUITY PAYBACK	0.0303	0.0509	0.2050	0.2564
PRESENT VALUE OF SHARE	58236.	24234.	25194.	24455.

AFTER TAX RATIO ANALYSIS	1983	1984	1987	1988
CASH RTN ON ORIG CASH EQUITY	0.0882	0.0974	0.1230	0.1195
PERCENT ORIG EQUITY PAYBACK	0.7212	1.0933	1.4764	1.5959
PRESENT VALUE OF SHARE	138910.	107116.	121852.	125434.

PARTNERSHIP INVESTMENT SUMMARY

FOR

EQUITY BACKER-2

OWNERSHIP FORM

INDIVIDUAL

MODIFIED INTERNAL RATE OF RETURN ANALYSIS

RETURN ANALYSIS WITHOUT SALE

	1983	1984	1987	1988
CUM.AFT TAX SPENDABLE CASH,	166052.	193958.	306989.	350511.
MOD. I.R.R. ON ORIG EQUITY	-0.0200	0.0091	0.0587	0.0668
MOD. I.R.R. ON CUM. EQUITY	-0.0200	0.0649	0.0974	0.1017

RETURN ANALYSIS WITH SALE

	1983	1984	1987	1988
CUM. CASH LESS ORIG EQUITY	76977.	29598.	149724.	197382.
CUM. CASH LESS CUM. EQUITY	76977.	80261.	200387.	248045.
MOD. I.R.R. ON ORIG EQUITY	0.0725	0.0252	0.0685	0.0757
MOD. I.R.R. ON CUM. EQUITY	0.0725	0.0819	0.1075	0.1110

R E P O R T S E C T I O N

F R O N T D O O R A N A L Y S I S

A S S U M P T I O N S

ANALYSIS YEAR IS 3 = 1981

C A S H F L O W

GROSS INCOME	1.000	EXPENSES	0.088
FIXED INCOME	1.000	FIXED EXPENSES	0.088
VARIABLE INCOME	0.000	VARIABLE EXPENSES	0.000
VACANCY	0.038	REAL ESTATE TAXES	0.109
DEBT REPAYMENT	0.740	EQUITY PAYMENT	0.026

DEBT STRUCTURE

TOTAL DEBT IN EFFECT	0.740
FIRST MORTGAGE	0.596
LAND LEASE	0.144

EQUITY CONTRIBUTION

TOTAL EQUITY	0.026		
COST LESS DEBT	0.003	AT ANNUAL RATE OF	0.097
WKG CAPITAL RS	0.022	AT ANNUAL RATE OF	0.100

F R O N T D O O R A N A L Y S I S

C A S H F L O W

P E R C E N T A G E B A S I S

ANALYSIS YEAR IS 3 = 1981

	TEST AT 1.00	TEST AT 1.05	TEST AT 0.95
TYPE 0 VALUE ESTIMATE =	1548196.	1625606.	1470786.

EQUITY RETURN BASIS
REQUIRED CASH FLOW

	YR.	#	YR.	#	YR.	#
GROSS RENT	260576.	4.52	270991.	4.70	250161.	4.34
LESS VACANCY	9837.	0.17	10230.	0.18	9444.	0.16
LESS R.E. TAXES	28427.	0.49	29563.	0.51	27291.	0.47
LESS EXPENSES	22940.	0.40	23857.	0.41	22023.	0.38
NET INCOME	199372.	3.46	207341.	3.60	191404.	3.32
DEBT SERVICE	153633.	2.67	161315.	2.80	145951.	2.53
CASH THROW-OFF	45739.	0.79	46026.	0.80	45452.	0.79

DEFAULT = 0.78672

ZERO EQUITY RETURN BASIS
REQUIRED CASH FLOW

	YR.	#	YR.	#	YR.	#
GROSS RENT	200796.	3.49	210835.	3.66	190756.	3.31
LESS VACANCY	7580.	0.13	7959.	0.14	7201.	0.12
LESS R.E. TAXES	21905.	0.38	23000.	0.40	20810.	0.36
LESS EXPENSES	17677.	0.31	18561.	0.32	16793.	0.29
NET INCOME	153633.	2.67	161315.	2.80	145951.	2.53
DEBT SERVICE	153633.	2.67	161315.	2.80	145951.	2.53
CASH THROW-OFF	0.	0.00	0.	0.00	0.	0.00

DEFAULT = 0.96225

RISK ADJUSTED BASIS WITH DEFAULT AT 0.870 AND ALLOCATING-14916.56 DOLLARS
REQUIRED CASH FLOW

	YR.	#	YR.	#	YR.	#
GROSS RENT	252261.	4.38	262934.	4.56	241588.	4.19
LESS VACANCY	9837.	0.17	10230.	0.18	9444.	0.16
LESS R.E. TAXES	36433.	0.63	37321.	0.65	35545.	0.62
LESS EXPENSES	29401.	0.51	30117.	0.52	28685.	0.50
NET INCOME	176590.	3.07	185266.	3.22	167914.	2.91
DEBT SERVICE	153633.	2.67	161315.	2.80	145951.	2.53
CASH THROW-OFF	22957.	0.40	23951.	0.42	21963.	0.38

DEFAULT = 0.87000

F R O N T D O O R A N A L Y S I S

C A S H F L O W

C A S H B A S I S

ANALYSIS YEAR IS 3 = 1981

	TEST AT 1.00	TEST AT 1.05	TEST AT 0.00
TYPE 0 VALUE ESTIMATE =	1548196.	1625606.	1470786.

EQUITY RETURN BASIS
REQUIRED CASH FLOW

	YR.	#	YR.	#	YR.	#
GROSS RENT	248164.	4.31	256133.	4.45	240196.	4.17
LESS VACANCY	7842.	0.14	7842.	0.14	7842.	0.14
LESS R.E. TAXES	22662.	0.39	22662.	0.39	22662.	0.39
LESS EXPENSES	18288.	0.32	18288.	0.32	18288.	0.32
NET INCOME	199372.	3.46	207341.	3.60	191404.	3.32
DEBT SERVICE	153633.	2.67	161315.	2.80	145951.	2.53
CASH THROW-OFF	45739.	0.79	46026.	0.80	45452.	0.79

DEFAULT = 0.78409

ZERO EQUITY RETURN BASIS
REQUIRED CASH FLOW

	YR.	#	YR.	#	YR.	#
GROSS RENT	202425.	3.51	210107.	3.65	194743.	3.38
LESS VACANCY	7842.	0.14	7842.	0.14	7842.	0.14
LESS R.E. TAXES	22662.	0.39	22662.	0.39	22662.	0.39
LESS EXPENSES	18288.	0.32	18288.	0.32	18288.	0.32
NET INCOME	153633.	2.67	161315.	2.80	145951.	2.53
DEBT SERVICE	153633.	2.67	161315.	2.80	145951.	2.53
CASH THROW-OFF	0.	0.00	0.	0.00	0.	0.00

DEFAULT = 0.96126

RISK ADJUSTED BASIS WITH DEFAULT AT 0.870 AND ALLOCATING-14712.45 DOLLARS
REQUIRED CASH FLOW

	YR.	#	YR.	#	YR.	#
GROSS RENT	239996.	4.17	248251.	4.31	231740.	4.02
LESS VACANCY	7842.	0.14	7842.	0.14	7842.	0.14
LESS R.E. TAXES	30528.	0.53	30251.	0.53	30804.	0.53
LESS EXPENSES	24635.	0.43	24413.	0.42	24858.	0.43
NET INCOME	176991.	3.07	185745.	3.22	168236.	2.92
DEBT SERVICE	153633.	2.67	161315.	2.80	145951.	2.53
CASH THROW-OFF	23357.	0.41	24431.	0.42	22284.	0.39

DEFAULT = 0.87000

BACK DOOR ANALYSIS

COMPONENTS

PERCENTAGE BASIS

ANALYSIS YEAR IS 3 = 1981

	TEST AT 1.00	TEST AT 1.05	TEST AT 0.95
GROSS RENT PROJECTED	207733.	218120.	197346.
REVENUE UNIT INCOME	3.606	3.786	3.426

JUSTIFIED COMPONENTS

TYPE 0 VALUE ESTIMATE =	1234234.	1308446.	1160270.
VALUE DIFFERENCE =	-313962.	-239750.	-387926.
LAND	264992.-0.203	280925.-0.155	249112.-0.251
SHELL	489970.-0.203	519431.-0.155	460608.-0.251
ELECT/WIR/PNB	198781.-0.203	210734.-0.155	186869.-0.251
HVAC	217764.-0.203	230858.-0.155	204715.-0.251
CEILING & FLOOR	78940.-0.203	83686.-0.155	74209.-0.251
PAVING	73425.-0.203	77840.-0.155	69025.-0.251
ROOF FENCE % SIN	21777.-0.203	23086.-0.155	20472.-0.251
ENTREPRENEURIAL	-119581.-0.203	-126771.-0.155	-112415.-0.251
LOT LIGHTING	8166.-0.203	8657.-0.155	7676.-0.251
EQUITY PULL	0.-1.000	0.-1.000	0.-1.000
FIRST MORTGAGE	947880.-0.203	1004874.-0.155	891077.-0.251
LAND LEASE	239162.-0.203	253543.-0.155	224830.-0.251
REFINANCE	0.-1.000	0.-1.000	0.-1.000
EQTY CONTRIBUTION	47192.-0.897	50029.-0.891	44364.-0.903

Critique of A Real Estate Appraisal

I. Political compromises in the 1930's lead to the appraisal docotoing which defines value and three normative approaches to value based on the economics before income tax. Currently there are strong factors pushing for and against restatement of the appraisal process:

A. Nomative methods are not predictive of price but nine times out of ten appraisers aer supposed to predict the price at which a property would sell under specific circumstances.

B. If the appraisal is to serve as a benchmark for a decision under specific circumstances, or purposes, then it should not be governed by conditions characteristic of an efficient market since real estate is not known for market efficiency.

C. Widespread acceptance of appraisal models is a function of the cost of reeducation, on the job training, word processing, and data processing and that is being drastically altered by electronics and communication advances.

D. A consistent theory for reconstructing appraisal has been prepared by Prof. R. U. Ratcliff but its tenets are being adapted at the grass roots level by individuals rather than considered by the controlling committee of the professional societies.

E. Factors which have delayed appraisal reform include:

1. The uncertainty surrounding efforts to merge the major appraisal societies which at this time are competitive and without control of the profession.
2. Fear that a retreat from old principles will discredit appraisal designations and existing regulatory monopolies and therefore contribute toward further competitive erosion by the accountants and the engineers and the investment bankers.
3. Timidity of practicing appraisers to call for a colloquium with which to draft a restatement of appraisal principles and thereby open exhausting and devicive debate.

II. To critique an appraisal provided as a benchmark of a mortgage loan and to classify the appraiser as contemporary or old guard, the reader should look to the following elements.

A. Definition of value - is it the classic definition or defined as the most probable price at which it would sell subject to specific financing terms?

B. Does the interest to be appraised represent fee title unemcumbered or does it include entitlement to the financing requrested or subject to financing appropriate to regulated institutional standard?

C. For a proposed projects does the appraisal assume completion and therefore a future appraisal date and does it assume absorption of the units into the market in a stated period of time. If so, it must prove absorption, capture rate and construction as reasonable assumptions or it has sidestepped the critical issue of indirect cost.

D. Does it discard any of the three approaches at the outset as inappropriate or does it wait until the report reaches the section called synthesis?

E. In using the market approach for an appraisal report indicate buyer motivation on comparable sales or current status of the comparable? Does the appraiser use basic statistics for adjustment or arbitrary percentage or flat dollar shifts in value? Does it provide the standard error of the investment or the mean price?

F. In doing the income approach does the appraiser use normalized income or cash flows over time and in capitalizing the income does he use market rates, Ellwood rates, or cash on cash mortgage equity. Only the latter is reliable for mortgage loan purposes.

G. In doing the cost approach, does the appraiser show the entrepreneurial compensation or is that buried in over-estimated construction costs? Hard dollar costs should be the lowest of three estimates, not the highest as advocated by appraisal textbooks. The spread is the developers fee for the entrepreneurial contribution to land, labor and capital.

H. Does the appraiser provide a test on the after tax basis of either his resale assumptions on which his income approach depends or his conclusion as to most probable price at which it would sell? These tests might include something like BFCF, the resulting financial ratios discussed previously, or a front door approach to demonstrate the rents implied by a given cost of acquisition.

I. Check the statement of limiting conditions to see what applies relative to underlying assumptions and limitations on use.

J. Check the professional designation. Does it include SREA which is the only designation which requires recertification and a continued learning curve.

The Ethics of Real Estate Finance

I. The traditional ethic of mortgage lending as well as its ultimate practical objective is to recover the principal advanced, the interest, and the extra expense cost of collection. For sake of argument, let us assume:

A. Posit: The United States can become a capital shy economy in the post industrial age for lack of consumer saving and bacause all of the major issues relative to energy, conservation, pollution, housing, and competitive production costs in the international market will require capital intensive solutions.

B. Posit: National priorities will require capital allocations on true interest rather than marginal after tax costs or a non-monetary rationing system for capital and investment banking.

C. Posit: Whether it is space ships, cardboard parodies of the Statue of Liberty, or real estate development we build anything that can be financed wisely or otherwise.

D. Posit: Real estate investors and developers can make money from empty buildings when present mortgage lending systems make it possible to speculate on a long term commodity market at almost no cost of the put that protects the speculator.

E. Posit: The standards of the commercial banker on construction loans and permanent loans form the standard of a competitive industry.

F. Therefore: Commercial bankers have an obligation to aggressively modify the current competitive standards and regulations for underwriting mortgage loans.

II. What are the major issues on which commercial bankers have the ethical responsibility to initiate mortgage lending reforms?

A. Regulations relative to loan to value ratios, the definition of an appraisal, and the evidence required to demonstrate need.

B. The redefinition of appraisal, market and merchandising analysis, and the permissable investment analysis format required for diligent independent review of the proposal.

C. Consistent standards for real estate financing made directly by the bank or indirectly with loans to investment banking and mortgage banking houses, collateralized by mortgages.

D. Certification of mortgage lending officers for training that includes both technical issues of mortgage lending and public policy issues relative to externalized costs and compatibility of proposed real estate with physical and financial plans of the community.

E. Participation in development of centralized data base records on existing space supplies, absorption rates, capture rates and borrower performance for major metropolitan areas maintained in cooperation with community and regional planners and assessors as well as other real estate lending institutions so that efficiency in real estate marketing is improved with adequate and timely information. Capital efficiency requires marketing efficiency since the ultimate take-out on a permanent loan is a customer.

Federal Home Loan Bank of Chicago Seventh District
111 East Wacker Drive, Chicago, Illinois 60601 · Phone (312) 565-5700

DISTRIBUTED BY THE FEDERAL HOME LOAN BANK OF CHICAGO - JUNE 29, 1977

ADVANCE COPY

FEDERAL HOME LOAN BANK BOARD
OFFICE OF EXAMINATIONS AND SUPERVISION

M E M O R A N D U M #R 41

To : OES Professional Staff June 6, 1977 JUN 17 1977

From: William Sprague Appraisal Policies and Practices of Insured Institutions and Service Corporations

SYNOPSIS: GUIDELINES REGARDING APPRAISAL PROCEDURES AND MANAGEMENT.

The soundness of an association's or service corporation's mortgage loans and real estate investments depends to a great extent upon the timeliness and adequacy of the appraisals of the real estate. This memorandum provides guidelines for appraisal management and procedures to this end. It is the responsibility of the examiner at each examination to evaluate the quality of the association's appraisal function in meeting the requirements of Insurance Regulations 563.17-1(c)(1) and 563.10. The examiner must similarly evaluate the service corporation's appraisal function.

Appraisal Management

The lending policies established by the board of directors determine the association's and service corporation's appraisal staff, fee appraiser and plant requirements. Management should ensure at all times that appraisal services fit both the ordinary and specialized needs of the association and service corporation, whether performed by staff or fee appraisers.

A. Staff and Plant

An appraisal should readily serve an underwriter's needs by providing a documented opinion of the market value of the property as of the date of the estimated market value and should indicate the degree of feasibility/marketability of the property. An accurate and fully useful appraisal is most often the work of a capable and suitably equipped fee or staff appraiser who has ready access to current market information. Therefore, each association and service corporation must be able to demonstrate that its fee and staff appraisers are capable and have the facilities necessary to perform adequate appraisals.

B. Training

Staff appraisers should continually increase their knowledge and skills through attendance at courses sponsored by universities, colleges and/or professional appraisal organizations. Memberships in professional appraisal organizations should be encouraged.

Appraisal Procedures

The appraisal content shall follow generally accepted and established appraisal practices as reflected in the nationally recognized professional appraisal organizations, such as: The American Institute of Real Estate Appraisers and the Society of Real Estate Appraisers.

Specifically, each appraisal report must:

1. be totally self-contained so that:

   a. it is a useful tool for prudent underwriting, REO and/or LTF decisions.

   b. when read by any third party, the appraiser's logic, reasoning, judgment and analysis in arriving at a final conclusion indicate to the reader the reasonableness of the market value reported.

   c. it demonstrates professional competence, ethics and expertise.

2. be of a narrative style for major loans and/or investments of similar magnitude made by the association or affiliates.

3. contain all recognized approaches to market value unless the appraiser fully explains and documents the rationale for eliminating one or more of the approaches to value.

4. take into consideration and make provision for all appropriate deductions and discounts for any development type property that requires:

   a. marketing periods in excess of 12 months for total, 100 percent, sell out, or

   b. occupancy build-up periods in excess of 12 months for the property to reach the appraiser's anticipated normal occupancy level.

5. address itself to the market/economic feasibility prospects for any proposed major loan/investment real estate project, in sufficient detail to support the appraiser's forecast of the probable success. If a market/economic feasibility report is prepared by other than the appraiser, the appraiser will set forth the reasoning and rationale for accepting or rejecting said report. All such market/economic feasibility studies will be made a permanent part of the appraisal report.

6. for properties and investments (other than single family or two family dwellings) assigned a value of $100,000 or more, contain a sales history analysis of the property over the past five years preceding the appraisal report, fully disclosing and verifying:

a. grantor(s)-grantee(s).

b. sale date(s).

c. sale price(s) and terms of financing, discounting the sale to a cash equivalent, where necessary.

d. any interrelated parties to each transaction.

7. address itself to "Market Value" as defined and qualified as acceptable to the Federal Home Loan Bank Board. Under no circumstance should the appraiser further qualify, or by assumptions, erode the impact of this definition. All market data inputs should be thoroughly analyzed and/or adjusted in terms of the above definition as qualified. Market value as defined is applicable in all lending/investment circumstances for insured associations and affiliates, including special purpose properties and REO/LTF situations. In REO/LTF situations, defined market value estimates will be derived on an "as is" basis.

The appraiser's "market value" estimate should, in view of the collateral lending posture of the savings and loan industry, reflect the most probable price to be derived should the property be placed on the market for sale, given the previously noted market value definition qualifiers.

William Sprague
Director

Distribution to State supervisory authorities to be made by District Directors-Examinations.

Previously submitted by [illegible]

100

Case Problem Bus 551 Howard J. Wicker

To: James A Graaskamp & Michael Robbins, Loan Committee
From: Howard J. Wicker, Analyst

INTRODUCTION:

We first have to ask whether this proposed deal really interests me. Is it even in the ballpark? We can try an Ellwood approach to see if the project value comes close to what they -- Johnson and Mason -- say it is worth. See Appendix A for the Ellwood calculations. The Ellwood calculation indicates that the total project is only worth $1,362,713. Johnson and Mason say it is worth $1.657,000. The difference between them is so large that I would say the deal is not reasonable at all.

Johnson, the mortgage applicant, does not even have enough money to handle the deal in its present form. According to his own application, he needs $382,000 in cash equity. If he puts the land in the deal, with the land having a market value of $332,400, and an equity value of $223,455, Johnson is in a difficult financial position. He has a personal note worth $37,500 due in just a few months, for instance. We would have to almost surely bail him out very soon if we made this loan, ignoring the Ellwood calculation that this is not a good deal to start with.

Nevertheless, you have asked how I could structure the deal so that it might work. Here is my analysis.

I. THE PEOPLE: JOHNSON, THE PROPOSED MORTGAGOR

A. Problems with his Application

Johnson does not appear to be completely candid with the information he has supplied us. He offers practically no information, on his financial statements, about his source of base income. He just says he is "self-employed." Mason, the mortage banker, says that Johnson is "highly experienced in the analysis and underwriting of such investment." But this appears to be puffery. I cannot see such detailed in the documents we have from Johnson. Indeed, Mason said in his April 2, 1975 loan application, that Johnson specialized "primarily in apartments" and that he intended, with this deal, to retain ownership of the project for the first time. He has previously generally built for sale to other parties. But we do not see on Johnson's documents a history of successful developments.

Johnson's financial statement indicates that he has a $35,000 "base income." We see nothing of whether this is his usual income or not. Thirty five thousand dollars in income per year does not seem to be much. Was this a good year for him or a poor one? If it was a poor one, he should have included income from previous years, so we could see this.

the ends of the centers, to allow for easy access and in and out traffic. He has his prime drawing tentants (grocery & drugs, for example) together. He has his grocery lease signed but not the lease for the drugstore. He should have some difficulty signing the small shop leases, for those spaces away from the drawing tenants. Johnson should keep a restaurant in the center, since it is a good draw. But Yum Yum is located poorly. It cannot draw, since it is blocked from buildings, so it does not offer the center anything, or take benefits from it. It should not be seperately located.

III. THE DEAL: AS IT STANDS

Given present plans for the center, can we make the loan? One item we might look at is the ratio of total costs to GLA. For 1-3 year old shopping centers in the Kansas region, operating expenses are $.67 per sq. ft. of GLA.[1] Our center is at the median. But, shopping centers at the median or lower all had losses, from $.12 to $1.02/sq. ft. See Appendix B.

A. The Picture for the Whole Project

The default ratio for the entire project is .81114, Considering the mortgage of $1,275,000. We desire .81 and have it here. However, we as the lender will have to take a second position on the land. This will be troublesome. Here are returns on the whole project:

	Year 5	Year 10
After-tax MIRR	7.34 %	8.68%
Before-tax C. on C.	6.81 %	6.81%
After-tax C. on C.	7.39 %	5.38%

The returns are very low, and indicate that Johnson may not earn a good return on his investment.

Our payback of original equity in year 10 is .7181, or 71%. Caldwell Banker indicates that an owner should get a return of all equity within 10 years. However, a slower payback is to our advantage.

Johnson also has assumed that his net income would remain constant during the 5-year holding period. This is a poor assumption. The next income/market value ratio goes down:

Year 1	Year3	Year5	Year10
.0945	.0893	.0846	.0749

These ratios should stay the same--net income and market value should stay parallel. To keep them parallel, Johnson will have

---

[1] Dollars & Cents of Shopping Centers: 1975, Urban Land Institute.

to boost rents a great deal in year 5, when some of his leases expire. This is a big risk.

B. The Picture on the Seperate Buildings

See Appendix B for the ratios and figures for each of the buildings.

Building A shows the worst results, and we would expect this. We can see price concessions on the rent there, and all loss leaders are in one building, which suggests that we propose that Johnson shift tentants. But as it stands, the default ratio for Building A is terrible, at 1.07 at the 5th year. The returns are terrible, also.

C. The Problem Areas

1. As explained above, Johnson does not have the assets to swing the deal according to the original application. We have to find a way to allow him to contribute less equity and still make a deal.
2. Also, we do not see good returns on the project as a whole.
3. If Johnson keeps the land, we will have a second mortgage position--bad.
4. The deal offers no "pleasure" to Johnson--only "bail-out" for us.
5. Yum Yum Tree--has big construction costs and offers little contribution. It should be in the main center anyway.

D. Proposed Solutions

A. Proposal #1

Johnson has to get some additional money somewhere, or reduce the size of the project, and its improvement costs and required loan, or arrange perhaps a sale-and-leaseback deal with us.

I have shown in Appendix D a proposed solution with assumptions to drop the Yum Yum Tree and arrange a sale-and-leaseback with Johnson's land.

Appendix D shows the ratios and returns. They are not good. The default ratio is .87--too high. The net income to market value ratio declines, since we did not adjust rents. The cash-on-cash rate declines, too.

B. Alternative Proposals

An alternate proposal is to have Johnson go in with a partner or into a joint venture. Keeping the same assumptions as in Alternative #1, we assumed also a $100,000 contributing partner. The rates and ratios are shown in Appendix E. Although the default ratio is acceptable, the returns are modest at best.

Another alternative is to reduce the project improvements seriously, by consolidating buildings A and B. This would reduce the required loan and enable us to offer a package to Johnson that will require an equity investment he can handle.

Appendix A--Ellwood Calculation

<u>Ellwood</u>

Eq. yield = 12%
NOI = 166,000
Holding per. = 5 year
Mtg. term = 27 years @ 75% L/V, i = 9.625%
App. over holding per. = 10%
R= Y-MC + (dep/app x 1/Sn)
C=Y+($\bar{P}$x1/Sn)-f
P=(f/i-1)(Sp-1)
P=(.10524/109625 - 1)(.6250)=.058376623
C=.12 + (.058376623 x .164615)-.10524
C=.0243696678
R= .12-(.75 x .0243696678) - (.10 x .164615)
R= .1218157
V= NOI/R= 166,000/.1218157= $1.362,713

Appendix B--Standard Operating Figures for New Shopping Centers: Kansas Area

Dollars per sq. foot of GLA 1-3 yrs old

	Site	Lower Decile	Median	Upper Decile	Difference From Median	[illegible]	Lower	Med.	Upper
Tot. oper. rcpts.	3.53	1.66	2.20	3.92	.73	26%	1.80	3.09	4.10
Tot. oper. exps.	.77	.30	.89	1.43	-.12	-.11%	.27	1.67	2.91
Oper. bal.	2.28	.74	1.78	2.85			1.07	2.29	2.88

Tenant's rent		
Variety		2.03
Supermarket	2.50	2.01
Drug	4.05	2.45

Funds After Debt Service (for 1-3 yr. old)

Tot. oper. rcpts.	1.80	3.04	4.10
exps.	1.29	2.38	4.07
NOI	(.12)	(1.02)	1.31
Add.deprec.	.10	.63	1.58
Less: mtg.	.07	.47	1.30

Management Assoc.	.02	.02	.06	.14

P283 Tot. Cap. Cost	28.22	16.59	25.20	35.95

Looking to Johnson's financial situation directly, it is clear he does not have much staying power. If there is a problem with the project, such as a major tentant leaving, we will have to bail him out. He has little base income. Does he intend to work full-time managing this project? If so, even the $35,000 base income will be gone, leaving him little if any cushion. He does not have much in assets anyway, and converting those assets to cash will also cost a good deal.

Most important for Johnson is his ratio of current assets to current liabilities. The ratio is:

$$\frac{\text{Current assets}}{\text{Current Liabilities}} = \frac{\$124,479}{\$127,500} = .9763$$

He is practically existing hand-to-mouth, and he is behind at that. And the notes are both due within the next year, one of them in two months.

Johnson has been a brick and mortar, as I can tell from the information I have. He has not had management or finance experience, it seems. He does not seem to have his personal finances in order, much less a large business project. He is overextended financially, and has not even used the leverage of his properties fully; he owns two of them outright, for example.

II. THE PROPERTY: THE DESIGN

Johnson's brick and mortar experince shows up in the design of the site. He has overbuilt it. One source indicates that a builder should not build too intensely on a site. You have to allow for expansion. You should have more than 4 sq. ft. of site space for every 1 sq. ft. of building space.[1] The ratio for our site is 4.244 to 1. However, Johnson has not allowed for delivery space; he has parking spaces all around the buildings. The Builder's Handbook suggests 5.5 sq. ft. of space for parking for every 1 sq. ft. of building. Johnson does not have enough parking, even without truck delivery access.

Johnson also makes a mistake in having seperate buildings. He has almost a street running right through the middle of the center. This is a barrier to customer traffic. A "U" or "L" or strip structure would be a better design for him. He at least should start with a large site relative to improvements, to allow for expansion.

Also, the store mix is poor. Grocery stores should be at

---

[1] The Community Builder's Handbook, Anniversary Edition, Urban Land Institute (1968).

Appendix D--A Proposed Solution

Assumptions

1. Drop Yum Yum Tree out of project, and replace with parking

2. Arrange a sale and leaseback with Johnson's land

Calculations:

$1,431,000	total imptovement cost
78,422	Yum Yum cost
$1,352,578	new improvement cost
x .75	L/V ratio
$1,014,434	loan amount
$1,352,578	
-1,014,434	
$ 338,144	total equity required
-223,455	Johnson's equity inland
$ 114,689	adjusted equi ty
- 50,00	Johnson wants to put in project in cash
$ 64,689	Additional equity needed

Appendix C--Ratios & Returns: Each Structure

	Default Ratio		After-tax MIRR		After-tax Eq.	Payback	Before-tax C. on C.		After-tax C. on C.	
	yr.5	yr.10	yr.5	yr.10		yr.10	yr.5	yr.10	yr.5	yr.10
Bldg A	1.07	1.09	3.8%	5.7%	0	.3132	-.36%	-.36%	3.29%	.95%
Bldg B	.5895	.5895	16.5%	14.98%	.98	1.8412	25.76%	25.76%	18.61%	16.18%
Yum Yum	.6023	.6023	13.74%	12.22%	.5	.9460	12.18%	12.18%	9.55%	8.25%